SIEMENS

SIMATIC

Bus links
DP/PA coupler, DP/PA link and Y link

Operating instructions

The following supplement is part of this documentation:

No.	Product Information	Drawing number	Edition
1	Standards and approvals	A5E01200465-02	11/2007
2	DP/PA Link and Y Link bus links IM 153-2 Interface Module	A5E01208363-01	08/2007

10/2006
A5E00193841-16

Safety Guidelines

This manual contains notices you have to observe in order to ensure your personal safety, as well as to prevent damage to property. The notices referring to your personal safety are highlighted in the manual by a safety alert symbol, notices referring only to property damage have no safety alert symbol. These notices shown below are graded according to the degree of danger.

Danger

indicates that death or severe personal injury **will** result if proper precautions are not taken.

Warning

indicates that death or severe personal injury **may** result if proper precautions are not taken.

Caution

with a safety alert symbol, indicates that minor personal injury can result if proper precautions are not taken.

Caution

without a safety alert symbol, indicates that property damage can result if proper precautions are not taken.

Notice

indicates that an unintended result or situation can occur if the corresponding information is not taken into account.

If more than one degree of danger is present, the warning notice representing the highest degree of danger will be used. A notice warning of injury to persons with a safety alert symbol may also include a warning relating to property damage.

Qualified Personnel

The device/system may only be set up and used in conjunction with this documentation. Commissioning and operation of a device/system may only be performed by **qualified personnel**. Within the context of the safety notes in this documentation qualified persons are defined as persons who are authorized to commission, ground and label devices, systems and circuits in accordance with established safety practices and standards.

Prescribed Usage

Note the following:

Warning

This device may only be used for the applications described in the catalog or the technical description and only in connection with devices or components from other manufacturers which have been approved or recommended by Siemens. Correct, reliable operation of the product requires proper transport, storage, positioning and assembly as well as careful operation and maintenance.

Trademarks

All names identified by ® are registered trademarks of the Siemens AG. The remaining trademarks in this publication may be trademarks whose use by third parties for their own purposes could violate the rights of the owner.

Disclaimer of Liability

We have reviewed the contents of this publication to ensure consistency with the hardware and software described. Since variance cannot be precluded entirely, we cannot guarantee full consistency. However, the information in this publication is reviewed regularly and any necessary corrections are included in subsequent editions.

Siemens AG
Automation and Drives
Postfach 48 48
90437 NÜRNBERG
GERMANY

Order No.: A5E00193841-16
Edition 10/2006

Preface

Purpose of the operating instructions

These operating instructions provide all required information to configure, mount, wire, and commission the DP/PA coupler and the DP/PA link and Y link bus couplings.

Basic knowledge required

To understand these operating instructions you should have general experience in the field of automation engineering.

Range of validity of these operating instructions

These operating instructions apply for the following products:

- IM 153-2: 6ES7153-2BA01-0XB0 and 6ES7153-2BA81-0XB0
- DP/PA coupler FDC 157-0: 6ES7157-0AC83-0XA0
- DP/PA coupler: 6ES7157-0AC82-0XA0
- DP/PA coupler Ex [i]: 6ES7157-0AD81-0XA0 and 6ES7157-0AD82-0XA0
- Y coupler: 6ES7197-1LB00-0XA0
- Bus module BM PS/IM: 6ES7195-7HA00-0XA0
- Bus module BM IM/IM: 6ES7195-7HD10-0XA0
- Bus module BM IM/IM: 6ES7195-7HD80-0XA0
- Bus module BM FDC 157-0: 6ES7195-7HG80-0XA0
- Bus module BM; DP/PA coupler: 6ES7195-7HF80-0XA0
- Bus module BM Y coupler: 6ES7654-7HY00-0XA0
- Active Field Distributor (AFD): 6ES7157-0AF81-0XA0
- Active Field Splitter (AFS) 6ES7157-0AF82-0XA0
- Complete package of the above components: 6ES7197-1LA03-0XA0

These operating instructions contain a description of the components that was valid at the time the operating instructions were published. We reserve the right to include product information with information updates with new components and components with a new product status.

Changes compared to the previous version

The following changes have been made relative to the predecessor version of these operating instructions *Bus couplings DP/PA link and Y link* with the drawing number A5E00193840-15, version 02/2006:

- New components:
  - DP/PA coupler FDC 157-0: 6ES7157-0AC83-0XA0

    The DP/PA coupler FDC 157-0 replaces the previous DP/PA coupler.
  - Bus module BM FDC 157-0: 6ES7195-7HG80-0XA0
  - Active Field Distributor (AFD): 6ES7157-0AF81-0XA0
  - Active field splitter (AFS) 6ES7157-0AF82-0XA0
- New functionalities:
  - Diagnostic capability
  - Ring redundancy
  - Coupler redundancy

Configure with *STEP 7*

The DP/PA coupler FDC 157-0 can be configured with *STEP 7* from V 5.3 SP3 and HSP0095.

The bus couplings DP/PA link and Y link can be configured with *STEP 7* from V 5.4.

Position in the overall information structure

Depending on the hardware used you require the following manuals in addition to these operating instructions:

- The manual for the implemented DP master, including the following special information:
  - Configuring and commissioning of a DP master system
  - Description of the DP master
- The *SIMATIC NET, PROFIBUS Networks* manual (order number 6GK1970-5CA10-0xA0)
- The *S7-300 Automation System, Hardware and Installation manual: CPU 312 IFM - 318-2 DP* (order number 6ES7398-8FA10-8xA0)
- The *S7-300, ET 200 M Ex peripheral modules automation systems* manual (order number 6ES7398-8RA00-8xA0),
  particularly the special information on the topics of intrinsic safety and explosion protection.

Sign posts

These operating instructions are subdivided into the following subjects:

- Product overview and description of the components
- Mounting, connecting and commissioning
- Operation and diagnostics
- Technical data
- Appendices
- Important terms are explained in the glossary.
- The index helps you to quickly find all texts relevant to your keyword.

Recycling and disposal

The described components are ecologically compatible, and thus suitable for recycling. For environmentally sound recycling and disposal of your old devices please contact a certified disposal service company for electronic scrap.

Contacts

See production information *Technical Support, Contacts and Training*.

You will find the documentation online at:

http://support.automation.siemens.com

Look for item number 19293011.

Training

See production information *Technical Support, Contacts and Training*.

SIMATIC Technical Support

See production information *Technical Support, Contacts and Training*.

Service & support on the Internet

See production information *Technical Support, Contacts and Training*.

Table of contents

Tables

Product Overview 1

1.1 Bus links

DP/PA coupler

The DP/PA coupler is the physical link between PROFIBUS DP and PROFIBUS PA. In stand-alone operation it offers the possibility of addressing PA field devices via PROFIBUS DP. No other components are required for this.

The DP/PA coupler is also used for more advanced coupling tasks in the DP/PA link.

The DP/PA coupler Ex [i] is available for connecting PA field devices in explosion protected environments.

DP/PA coupler FDC 157-0

The DP/PA coupler FDC 157-0, FDC stands for "Field Device Coupler" has PROFIBUS-DP diagnostic functions as DP slave.

Using a DP/PA coupler pair and field distributors enables redundant operation on an equipotential bonding line in 2 variants:

- Ring redundancy with the active field distributor (AFD)
- Coupler redundancy with the active field splitter (AFS)

The DP/PA coupler FDC 157-0 can be used stand-alone or in the DP/PA link in this regard

DP/PA link

The DP/PA link consists of one or two IM 153-2 interface modules, and one to five DP/PA couplers that are either connected with one another via passive bus couplers or via bus modules.

The DP/PA link creates a network transition from a PROFIBUS DP master system to PROFIBUS PA. In this case the two bus systems are non-interacting through the IM 153-2 both physically (galvanically) and in terms of protocols and time.

By using two IM 153-2 interface modules, the entire underlying PROFIBUS PA master system can be connected to a redundant DP master system of an S7-400H as switched peripherals. For this purpose installation is always executed with bus modules.

Y link

The Y link comprises two IM 153-2 interface modules and a Y coupler that are connected to one another via bus modules.

The Y link creates a network transition from the redundant DP master system of an S7-400H to a non-redundant DP master system. This means that devices with only one PROFIBUS DP interface can be connected to a S7-400H as switched peripherals.

1.2 Integration in the automation environment

1.2.1 What are distributed I/O devices?

Distributed I/O Devices - Field of Application

When a system is configured, the I/Os from and/or to the process are often integrated centrally in the automation system.

In the case of greater distances of the inputs and outputs from the automation system the wiring may be very extensive and confusing. Electromagnetic interference may be impair reliability.

Distributed I/O is suitable for use with systems of this kind.

- The PROFIBUS DP master is located in a central position.
- The distributed I/O devices (inputs and outputs) work at their decentral locations.
- With its high transmission speeds the high power PROFIBUS DP ensures that the control system CPU and the distributed I/O devices communicate smoothly.

What is PROFIBUS DP?

PROFIBUS DP is an open bus system conforming to IEC 61784-1:2002 Ed1 CP 3/1 with the "DP" transmission protocol (DP stands for distributed I/O).

Physically PROFIBUS°DP is implemented either as an electrical network based on shielded twisted-pair cables, or as an optical network based on fiber optic cable.

The "DP" transmission protocol facilitates very fast cyclical data exchange between the control system CPU and the distributed I/O devices.

What is PROFIBUS PA?

PROFIBUS PA is the communication-compatible extension of PROFIBUS DP to include a transmission technology that also permits applications in potentially explosive areas. Transmission from PROFIBUS PA conforms to the international IEC 61784-1:2002 Ed1 CP 3/2 standard.

PROFIBUS PA enables transducers and control devices in potentially explosive areas to communicate with the automation system over long distances. With the PROFIBUS PA the field devices can be fed via the data lead at the same time.

The following components are available for the transition of the transmission technology of PROFIBUS DP (IEC 61784-1:2002 Ed1 CP 3/1) to PROFIBUS PA (IEC 61784-1:2002 Ed1 CP 3/2):

- DP/PA coupler in stand-alone mode
- DP/PA link

1.2.2 DP/PA coupler FDC 157-0

DP/PA coupler FDC 157-0

DP/PA coupler FDC 157-0 with diagnostics function is a transition between PROFIBUS DP and PROFIBUS PA, to which field devices are connected.

Using a DP/PA coupler pair and field distributors enables redundant operation on an equipotential bonding line in 2 variants:

- Ring redundancy with the active field distributor (AFD)
- Coupler redundancy with the active field splitter (AFS)

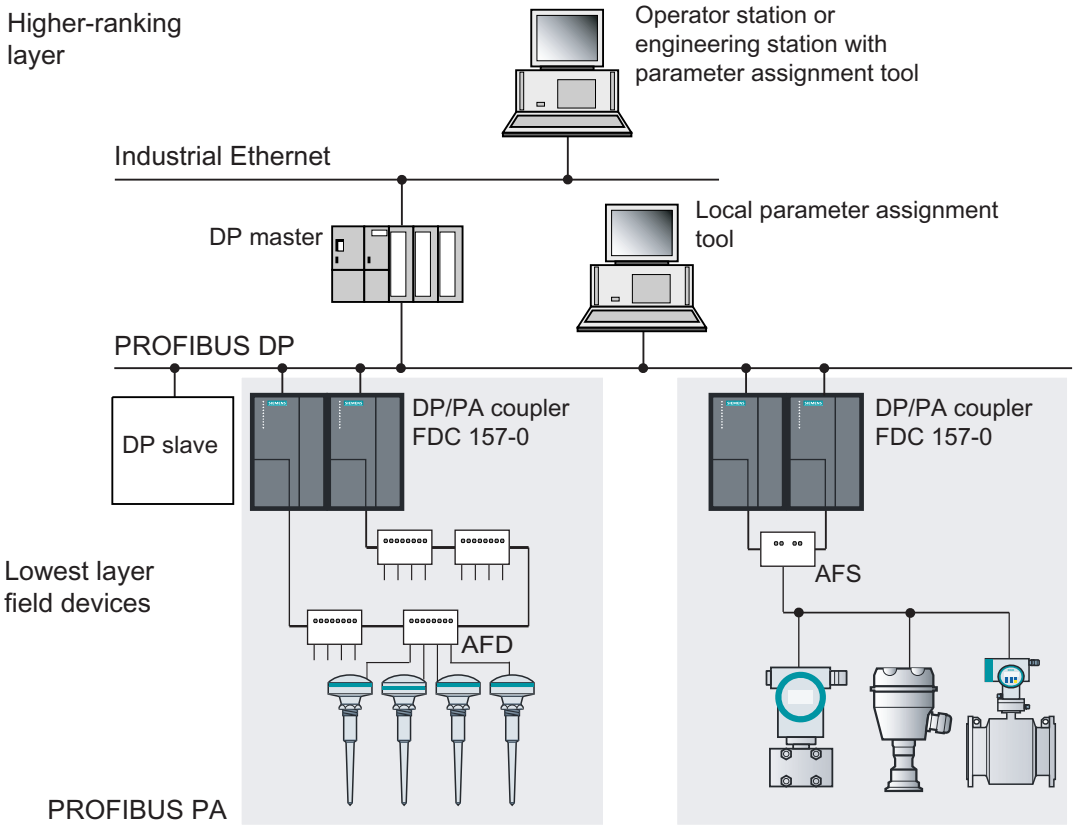

Figure 1-1 Integration of the DP/PA coupler FDC 157-0 in the system environment

1.2.3 DP/PA coupler / DP/PA Ex [i] coupler

DP/PA coupler

The DP/PA coupler is a transition between PROFIBUS DP and PROFIBUS PA to which the PA field devices are connected. The following figure shows how the DP/PA coupler is integrated into the system.

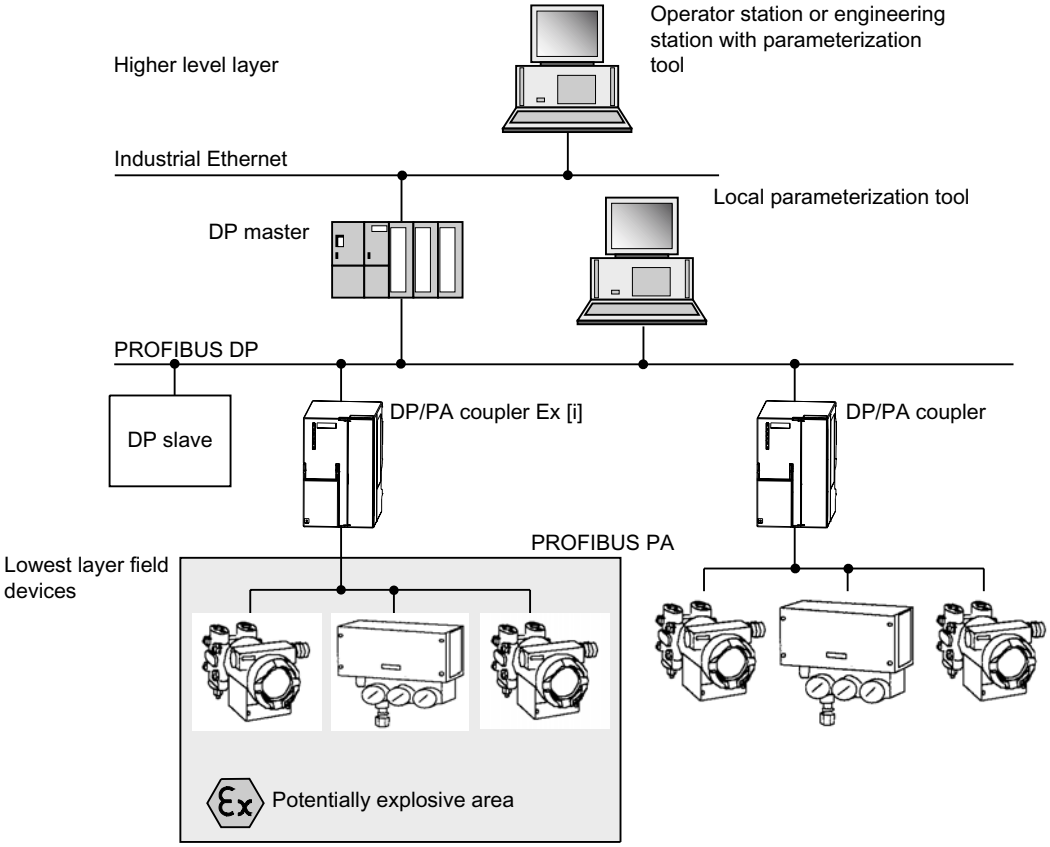

Figure 1-2 Integration of the DP/PA coupler within the system environment

1.2.4 DP/PA link

DP/PA link

In relation to higher level systems (towards the automation device) the DP/PA link is a DP slave and it is a DP master in relation to lower level systems. The following figure shows how the DP/PA link is integrated into the system.

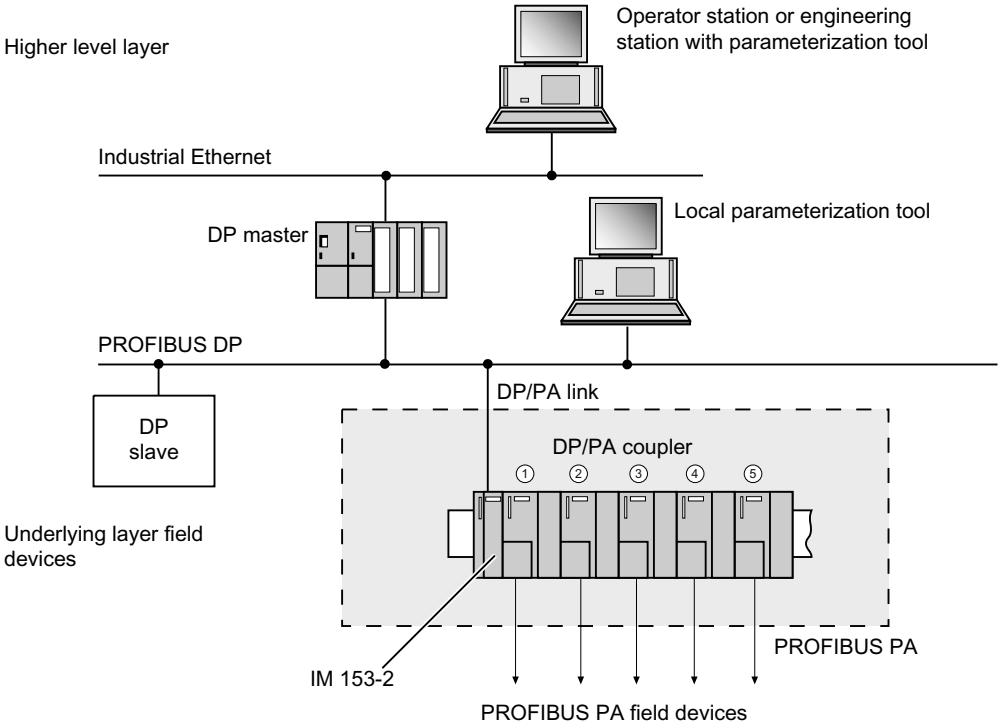

Figure 1-3 Integration of the DP/PA coupler within the system environment

1.2.5 Y link

Y link

In relation to higher level systems (towards the automation device) the Y link is a DP slave and it is a DP master in relation to lower level systems. The following figure shows how the Y link is integrated into the system.

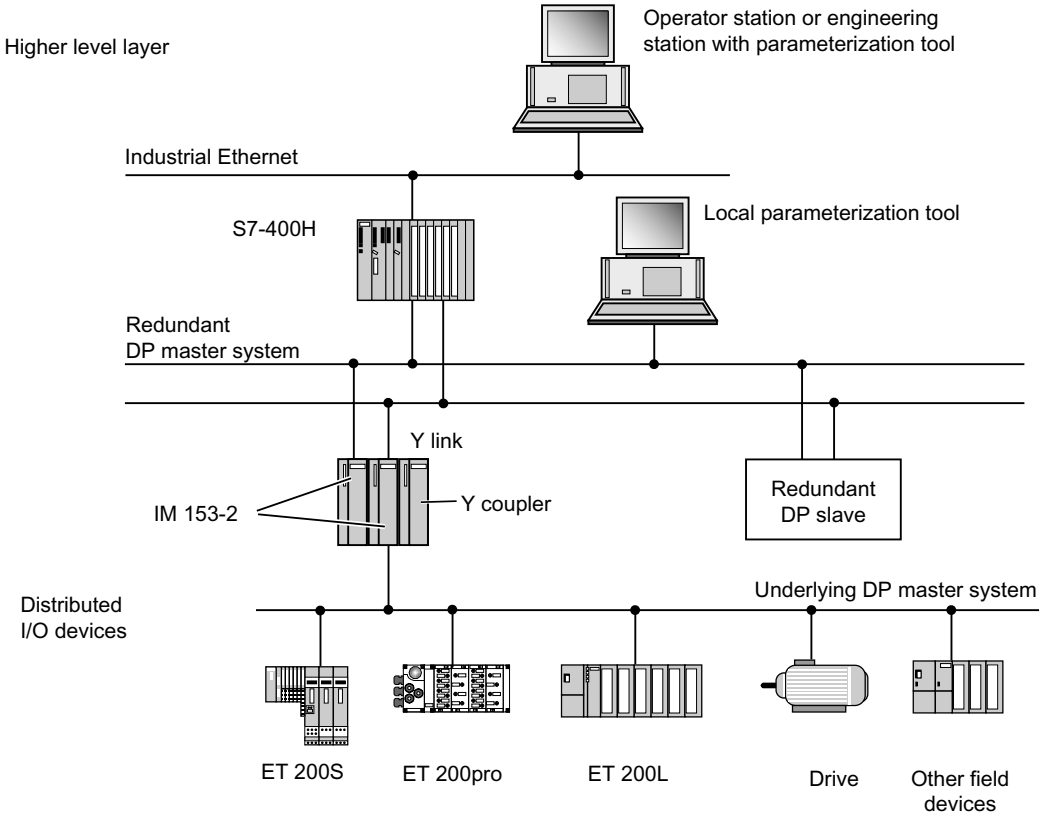

Figure 1-4 Integration of the Y link within the system environment

Description of the components 2

2.1 DP/PA coupler FDC 157-0

Applications

The DP/PA coupler FDC 157-0 is designed for the following applications:

- Non-redundant operation:
  - Stand-alone operation without additional components
  - Replacement for the DP/PA coupler with order number 6E7157-0AC82-0XA0
  - Operation in the DP/PA link on a simple DP master system or on an S7-400H
- Redundant operation:
  - Ring redundancy when using the AFD
  - Coupler redundancy when using the AFS
  - Operation in the DP/PA link on a simple DP master system or on an S7-400H

Availability

- Increased availability through ring redundancy and coupler redundancy
- Automatic isolation of defective partial segments including automatic bus termination
- Repair and extension of the bus segment is possible in during operation

Commissioning

- Simplified commissioning through extended diagnostic possibilities and automatic bus termination.

Properties

The DP/PA coupler FDC 157-0 is designed for the following applications:

- Electrical isolation between PROFIBUS DP and PROFIBUS PA
- Implementation of the transmission physics between RS 485 and symmetric bus physics in accordance with IEC IEC 61784-1:2002 Ed1 CP 3/2
- DP slaves: adjustable PROFIBUS address 1 to 125 via DIL switch
- Diagnostics via LEDs
- Diagnostics function via PROFIBUS DP:
  - Current value or voltage value as user data
  - Local LifeList
  - Wire-break/short circuit
- Selection of the redundancy mode via DIL switch
- Transmission rate of 45.45 kBaud on PROFIBUS DP
- Transmission rate of 31.25 kBaud on PROFIBUS PA
- Integrated supply unit for PROFIBUS PA
- Integrated bus terminator for PROFIBUS PA
- Extended environmental conditions

Configuration

The DP/PA coupler FDC 157-0 can be used as a stand-alone device on all DP masters that support 45.45 kBaud.

DP/PA coupler FDC 157-0 configuration as DP slave is required in the following

cases:

- If the diagnostic functions will be effective.
- If the DP/PA couplers will be operated with ring redundancy or coupler
- redundancy.

Note

If you use the IM 153-2 together with the DP/PA couplers as DP/PA link, in this case the PROFIBUS DP connections to the DP/PA couplers are not required. The IM 153-2 and the DP/PA couplers are connected via the S7 backplane bus.

See also

Changes relative to predecessor modules (Page 2-12)

2.2 DP/PA coupler / DP/PA Ex [i] coupler

Application

The DP/PA coupler is intended for the following applications:

- Stand-alone operation without any other components
- Operation in the DP/PA link on a simple DP master system or on an S7-400H

Features

The DP/PA coupler has the following characteristics:

- Potential isolation between PROFIBUS DP and PROFIBUS PA
- Implementation of the physical transmission system between RS 485 and synchroner the synchronous bus system conforming to IEC 61784-1:2002 Ed1 CP 3/2
- Diagnostics using LEDs
- Transmission rate of 45.45 kBaud to PROFIBUS DP
- Transmission rate of 31.25 kBaud to PROFIBUS PA
- Integrated supply unit for PROFIBUS PA
- Integrated bus termination for PROFIBUS PA
- Extended environmental conditions

Special features of the DP/PA Ex [i] coupler

The DP/PA Ex [i] coupler has the following additional characteristics:

- As a PROFIBUS node you can use the Ex [i] DP/PA coupler of device category 3G in zone 2-type potentially explosive areas.
- Intrinsic safety for the underlying PROFIBUS PA
- Integrated intrinsically safe supply unit for PROFIBUS PA interface and integrated barrier
- **DP/PA Ex [i] coupler (6ES7157-0AD81-0XA0):**

  You may connect intrinsically safe electrical apparatus of the device category 1G, 2G and 3G for the Zone 0, 1 and 2 to the intrinsically safe PROFIBUS PA.
- **DP/PA Ex [i] coupler (6ES7157-0AD82-0XA0):**

  You may connect intrinsically safe electrical apparatus of the device category 1G, 2G and 3G for the Zone 0, 1 and 2 as well as of device category 1D, 2D and 3D for the zone 20, 21 and 22 to the intrinsically safe PROFIBUS PA.

Configuration

The DP/PA coupler can be used as a stand-alone device on all DP masters that support 45.45 kBaud.

It is not necessary to configure the DP/PA coupler. You only have to set the transmission speed for the relevant DP at 45.45 kBaud and configure and parameterize the PA field devices.

Note

If you use the IM 153-2 together with the DP/PA couplers as a DP/PA link, the PROFIBUS DP connections to the DP/PA couplers are not required. The IM 153-2 and the DP/PA coupler are connected via the S7 back plane bus.

2.3 Y coupler

Application

The Y coupler is only determined for operation in the Y link on a redundant DP master system, for example on an S7-400H

It is not possible to operate the Y coupler without IM 153-2.

Features

- Connection of DP standard slaves
- Transmission speeds ranging from 45.45 kBaud to 12 MBaud
- Potential isolation between IM 153-2 and the underlying PROFIBUS DP
- Power is supplied to the Y coupler via the backplane bus.

Configuration

The Y coupler is an integral part of the Y link and is not configured separately.

2.4 IM 153-2

Application

The IM 153-2 is intended for the following applications:

- Operation in the DP/PA link
  - link on a non-redundant DP master system
  - Operation on a redundant DP master system, for example on an S7-400H
- Operation in the Y link on a redundant DP master system, for example on an S7-400H

Features

- Any transmission speed between 9.6 kBaud to 12 MBaud for the higher-level DP master system
- Diagnostics using LEDs and the user program
- Bumpless switchover of active channel in redundancy mode
- Support of system modifications during operation, both in S7 standard mode and in redundancy mode.
- Depending on the higher level DP master it can be operated as DPV0 or DP V1 slave.

2.5 DP/PA link

Application

The DP/PA link is intended for the following applications:

- S7 standard mode on S7-300 or S7-400
- Redundancy mode, for example on S7-400H
- DP standard master mode

The following information applies in part to both the S7 standard mode and the DP standard master mode. In such cases the term "non-redundant mode" is used.

Operating principle

- The DP/PA link is slave on the higher level DP master system and acts as a proxy for the nodes connected to the underlying bus system (PA field devices).
- The DP/PA link forms an independent underlying bus system that is decoupled from the higher level DP master system in terms of communication.
- The use of several DP/PA couplers serves to increase the current carrying capacity of the PA master system.
- Together with the connected PA field devices all the DP/PA couplers of a DP/PA link form a single common bus system.

Configuration options

A DP master system can be extended by means of DP/PA links in the following way:

- The number of the DP/PA links on a DP master system is only limited by the maximum number of bus nodes, which is 126.
- Up to five DP/PA couplers can be operated in each DP/PA link. Y couplers cannot be operated in the DP/PA link.
- The number of nodes in each PA master system is limited to 64. The total number of slots in each case is limited to (236 minus number of PA field devices).
- The configuration frame and the user data frame of the DP/PA link are both derived from the frame contents of the underlying PA field devices.
- The maximum length of the frames for configuration data, parameter assignment data, diagnostics data and I/O data is 244 bytes in each case.
- Cascading of the DP/PA links is **not** permitted.

PA field devices on the underlying PA master system are only operated in the DPV1 mode if they are suitable for bumpless switching when there is a modification of the system during operation.

STEP 7 identifies their suitability from an entry in the Device Data Base File (DDBF) of the PA field device

- PrmCmd_supp=1

If this entry is not to be found, the PA field device is operated in the DPV0 mode.

Furthermore, the Slave_Redundancy_supp=1 entry requirement must be met.

Configuration

The DP/PA link can be configured with *STEP 7* V5.4 and later.

Parameter assignment for the PA field devices

The PA field device parameters are assigned by means of a suitable tool such as SIMATIC PDM*SIMATIC PDM*, from a PD / PC that is connected to the higher level PROFIBUS DP. For more detailed information please refer to the documentation of your parameter assignment tool.

User data of the DP/PA link

The DP user data frame of the DP/PA link depends on the number of configured PA field devices. It comprises the data blocks of the configured PA field devices arranged one after the other. The data blocks are sorted in ascending order according to PA address.

According to *PROFIBUS PA Profile for Process Control Devices, General Requirements* each process variable is accompanied by one status byte that contains a statement about the status of the process variable.

In the case of failure on the part of one PA device, first of all the relevant input data, including the status byte in the user data frame of the DP/PA, are reset. Then the corresponding information is entered into the diagnostic frame.

When the PA field device is restored, the corresponding information is entered in the diagnostic frame. Virtually simultaneously the valid input data of the PA field device in the user data frame of the DP/PA link are again available. The status byte displays the valid data.

Note

To obtain the state of the PA field devices as quickly as possible, it is advisable to generally evaluate the status byte in the user program.

Switchover time to PROFIBUS PA during redundant mode

When there is a master-standby switchover or the active IM 153-2 fails, the PA field devices are processed via the standby IM 153-2.

Switchover is bumpless, that is the states of the I/Os are retained during switchover.

Switchover time is defined as the time between activating the standby IM and availability of new input data.

Condition / Requirement	Switchover time
Switchover time with unchanged PA configuration	type: 70 ms + number of PA field devices x 51 ms
	max.: 820 ms + number of PA field devices x 50 ms
Switchover time if configuration is changed during mode	type: 80 ms + number of PA field devices x 67 ms *
	max.: 800 ms + number of PA field devices x 130 ms *
* with unchanged PA field device addresses	

Communication links from the PD / PC to the PA field devices

Up to 10 communication links to PA field devices can be set up simultaneously from a PD / PC via the DP/PA link.

During redundant mode all the communication links from the PD / PC to the PA field devices remain intact when the active channel is switched over from one IM 153-2 to the other.

2.6 Y link

Application

The Y link is intended for the redundancy mode, for example on S7-400H.

Operating principle

- The Y link is slave on the higher level DP master system and acts as a proxy for the nodes connected on the underlying bus system (DP slaves).
- The Y link forms an independent underlying bus system that is decoupled from the higher level DP master system in terms of communication.

Configuration options and limitations

A redundant DP master system can be extended by means of Y links in the following way:

- The number of Y links on an S7-400H is only limited by the maximum number of bus nodes, which is 126.
- Only **one** Y coupler can be operated in each Y link. DP/PA couplers cannot be operated in the Y link.
- The number of nodes in each DP master system is limited to 64. The total number of slots in each case is limited to (236 minus number of PA field devices).
- The configuration frame and the user data frame of the Y link are both derived from the frame contents of the lower level slaves.
- The maximum length of the frames for configuration data, parameter assignment data, diagnostics data and I/O data is 244 bytes in each case.
- Cascading of the Y links is **not** permitted.
- Direct data exchange and synchronism are not feasible in the underlying DP master system.

Slaves on the underlying PA master system are only operated in the DPV1 mode if they are suitable for bumpless switching when there is a modification of the system during operation.

STEP 7 identifies their suitability from an entry in the DDBF file of the slave:

- PrmCmd_supp=1

If this entry is not to be found, the slave is operated in the DPV0 mode.

Furthermore, the Slave_Redundancy_supp=1 entry requirement must be met.

Configuration

The Y link can be configured with *STEP 7* V5.4 and later.

When *STEP 7* calculates the bus parameters, the connected nodes on the underlying DP master system as well as the Y link itself are taken into account.

Parameter assignment for the DP slave

S7-400H assigns the parameters for the DP slaves in the underlying DP master system via the Y link.

User data of the Y link

The DP user data frame of the Y link depends on the number of configured DP slaves. It comprises the data blocks of the configured DP slaves arranged one after the other. The data blocks are sorted in ascending order according to DP address.

If a DP slave fails, the relevant input data in the user data frame of the Y link are reset first. Then the corresponding information is entered into the diagnostic frame.

When the DP slave is restored, the corresponding information is entered in the diagnostic frame. Virtually simultaneously the valid input data of the DP slave in the user data frame of the Y link are again available.

Diagnostics data of the DP slaves

The processing of diagnostic frames from DP slaves depends on whether the IM 153-2 is operated as a DPV0 slave or as a DPV1 slave.

With *STEP 7* the diagnostics frames of the underlying DP slaves can be displayed in the online view of HW Config.

Communication links from the PD / PC to the DP slaves

Up to 10 communication links to DP slaves can be set up simultaneously from a PD / PC via the DP/PA link.

Communication links can only be passed on from the S7-400H to the underlying DP master system.

All the communication links from the PD / PC to the DP slaves remain intact when the active channel is switched over from one IM 153-2 to the other.

See also

Identifier-related diagnostics (Page 12-13)

2.7 Active field distributor (AFD)

Active field distributor (AFD)

PA field devices, e.g. measuring instruments, sensors and actuators, can be connected to the active field distributor (AFD).

In conjunction with 2 DP/PA couplers FDC 157-0 the active field distributor (AFD) enables operation of **ring redundancy**. In this case a maximum of 8 active field distributors (AFD) connect 2 DP/PA couplers with the PA field devices. You can connect up to 4 PA field devices to one active field distributor (AFD). The total number of PA field devices on the equipotential bonding line is 31 devices and it is limited by 1 A maximum current.

Functions

- Connection of field devices for PROFIBUS PA
- Automatic bus termination
- Isolation of defective PA segments
- Connection of isolated PA segments after fault rectification
- Extending a PA segment during operation

Properties

- 2 cable glands for the PA main line
- 4 cable glands for 4 PA field devices
- Connection of the PROFIBUS PA main line and the PA spur lines via the cage-clamp method
- Reverse polarity protection connections
- Diagnostics via LEDs
- Power supply via the PA bus
- Screw gland on substrate or mount with adapter on mounting rail
- Degree of protection IP66
- Grounding terminal outside

See also

Ring redundancy with active field distributor (AFD) (Page 3-4)

Screw the active field distributor to the substrate (Page 4-6)

Mounting active field distributors on the mounting rail (Page 4-7)

Connecting the PROFIBUS PA to the active field distributor (AFD) (Page 5-8)

2.8 Active field splitter (AFS)

Active field splitter (AFS)

The active field splitter (AFS) connects 2 DP/PA couplers FDC 157-0 with the field devices of a PROFIBUS equipotential bonding line. Thus it enables operation of **coupler redundancy** on the equipotential bonding line. The total number of PA field devices on the equipotential bonding line is 31 devices and it is limited by 1 A maximum current.

Functions

- Automatic switchover of the PA main line to the active DP/PA coupler

Properties

- 2 cable glands for the PROFIBUS PA main line
- 1 cable gland for the PROFIBUS PA main line
- Optional: Center feed via a cable bushing
- Connection of the PROFIBUS PA main lines via the cage-clamp method
- Reverse polarity protection connections
- Connection of maximum 31 PA field devices
- Diagnostics via LEDs
- Power supply via the PA bus
- Screw gland on substrate or mount with adapter on mounting rail
- Degree of protection IP66
- Grounding terminal outside

See also

Coupler redundancy with active field splitter (AFS) (Page 3-6)
Screw the active field distributor to the substrate (Page 4-6)
Mounting active field distributors on the mounting rail (Page 4-7)
Connecting the PROFIBUS PA to the active field distributor (AFS) (Page 5-13)

2.9 Changes relative to predecessor modules

DP/PA coupler FDC 157-0 (6E7157-0AC83-0XA0)

- Diagnostics function via PROFIBUS DP

  The DP/PA coupler is transparent or optionally it can be used as PROFIBUS slave with the following diagnostics information:

  – Current value on the equipotential bonding line of the active DP/PA coupler, or voltage value on equipotential bonding line at the end of the cable

  – Local LifeList: Detection of the assignment of PA field devices to the DP/PA coupler

  – Wire break/short-circuit on the equipotential bonding line

- Scalable configuration to increase availability:

  – Ring redundancy via the active field distributor (AFD)

  – Coupler redundancy via the active field splitter (AFS)

Bus module BM FDC 157-0 (6ES7195-7HG80-0XA0)

- Bus module for the DP/PA coupler FDC 157-0. Required for operation with ring redundancy and coupler redundancy.
- Coding to ensure connection of permissible modules.

See also

DP/PA coupler FDC 157-0 (Page 2-1)

2.10 Compatibility with predecessor modules

Compatibility DP/PA coupler FDC 157-0:

The DP/PA coupler FDC 157-0 with order number 6E7157-0AC8**3**-0XA0 replaces the DP/PA coupler with order number 6E7157-0AC8**2**-0XA0. The bus module does not need to be replaced.

On the DP/PA coupler FDC 157-0 the PROFIBUS address is factory set to 0. Thus the diagnostic function is deactivated, the DP/PA coupler is transparent. This means that it is compatible to the predecessor module as a replacement part. Configuration is not required.

Note

Diagnostics function

If you would like to use the diagnostic function of the DP/PA coupler FDC 157-0 in existing systems as well, then set the PROFIBUS address on the DP/PA coupler and in the configuration > 0.

Note

Redundancy mode

If you would like to use the DP/PA coupler FDC 157-0 with ring redundancy then you must use the BM FDC 157-0 bus module.

Bus module BM FDC 157-0

The bus module BM FDC 157-0 with order number 6ES7195-7HG80-0XA0 can only be used together with the DP/PA coupler FDC 157-0 with order number 6ES7157-0AC8**3**-0XA0.

Compatibility of the IM 153-2

The IM 153-2BA81-0XB0 can be used as a spare part for all IM 157s. This means that configuration can then also be performed with an older version of *STEP 7*. The specifications in the documentation on the replaced IM 157 apply.

Rule:
If the IM 153-2BA81 is configured as IM 157-0AA81-, you then require the bus module, BM IM/IM 6ES7195-**7HE80**-0XA0.
If the IM 153-2BA81 is configured as IM 157-0AA82-, you require the bus module, BM IM/IM 6ES7195-7**HD80**-0XA0.

Compatibility of the IM 157

The IM 157 with order number -0AA82- can be used as a spare part for all preceding modules. This means that configuration can then also be performed with an older version of *STEP 7*. The specifications in the documentation on the replaced IM 157 apply.

Rule:
If the IM 157 is configured as ...0AA81-, you then require the bus module, BM IM/IM 6ES7195-**7HE80**-0XA0.
If the IM 157 is configured as ... 0AA82-, then you require the bus module, BM IM/IM 6ES7195-7**HD80**-0XA0.

Arrangement rules

If configured accordingly, you can operate the combinations of IM 153-2 and IM 157 interface modules listed in the table compatibly on active BM /IM bus modules.

Table 2-1 Compatible product statuses of interface modules IM 153-2 and IM 157.

If the redundant interface modules are configured as	... and the interface modules are plugged in on the active busmodule 6ES7195-,	then the following interface modules can be oeprated compatibly:
IM 157-0AA81	7HE80-0XA0	IM 157-0AA81 IM 157-0AA82 IM 153-2BA81
IM 157-0AA82	7HD80-0XA0	IM 157-0AA82 IM 153-2BA81
IM 153-2BA01	7HD10-0XA0 7HD80-0XA0	IM 153-2BA01 IM 153-2BA81
IM 153-2BA81	7HD80-0XA0	IM 153-2BA81

Compatibility of the Y coupler

Der Y coupler 6ES7197-1LB00-0XA0 **cannot** be used as a spare part for Y coupler 6ES7654-0YK00-0AB0.

Compatibility of the bus modules

Bus module BM IM/IM 6ES7195-**7HD80**-0XA0 can only be used together with IM 153-2Bxx1-0XB0 and IM 157-0AA82-0XA0 and is **cannot** be used as a spare part for 6ES7195-**7HE80**-0XA0.

Application planning

3

3.1 Installation variants with the DP/PA coupler FDC 157-0

3.1.1 Installation variants

Introduction

You can install a maximum of 5 DP/PA couplers FDC 157-0, of which one coupler pair is installed in redundant mode at the end of the configuration. For operation with ring redundancy and coupler redundancy the bus module BM FDC 157-0 is required.

DP/PA couplers in the DP/PA link

If you use the IM 153-2 together with the DP/PA couplers as DP/PA link, in this case the PROFIBUS DP connections to the DP/PA couplers are not required. The IM 153-2 and the DP/PA couplers are connected via the S7 backplane bus.

Diagnostics function

The diagnostic function of the DP/PA coupler FDC 157-0 is available if valid PROFIBUS addresses are set on the DP/PA couplers and in the configuration software.

Applications

The following table lists the applications for the DP/PA coupler FDC 157-0 and the available functions.

Table 3-1 Applications DP/PA coupler FDC 157-0

Applications DP/PA coupler FDC 157-0	Functions			
	Replacement for DP/PA coupler 6ES7157-0AC82-0XA0	Diagnostics function	Ring redundancy	Coupler redundancy
			Bus module BM FDC 157-0 required	
Stand-alone mode (without DP/PA link)	X	X	X	X
Operation in the DP/PA link				
Operation in the redundant DP/PA link				

See also

Combination of non-redundant and redundant DP/PA couplers (Page 3-10)

Configuration variants (Page 3-12)

Setting the PROFIBUS address and redundancy mode (Page 6-8)

3.1.2 DP/PA coupler in non-redundant mode

DP/PA coupler in stand-alone mode

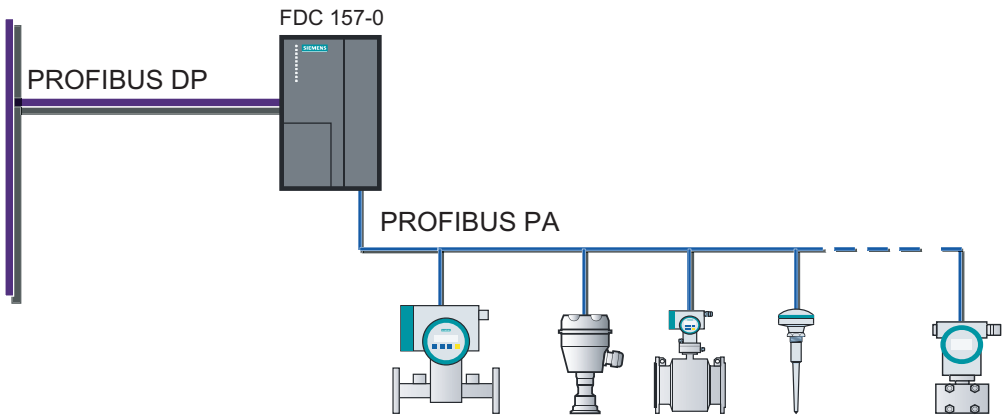

DP/PA coupler in the DP/PA link

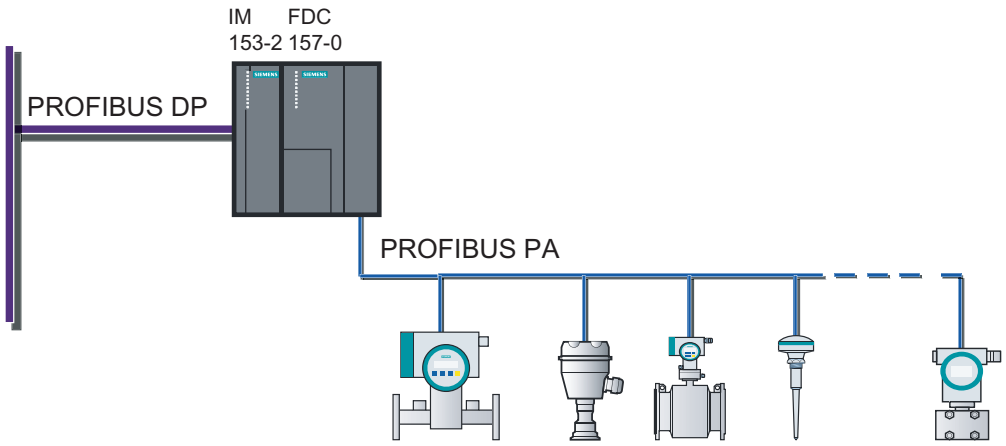

Extension of the equipotential bonding line

You can extend the equipotential bonding line in stand-alone mode as well as in the DP/PA link with AFDs.

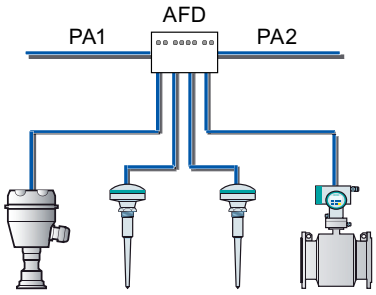

3.1.3 DP/PA coupler in redundancy mode

3.1.3.1 Ring redundancy with active field distributor (AFD)

Ring redundancy

The use of a DP/PA coupler pair and of active field distributors increases the availability of the equipotential bonding line. Ring redundancy occurs through installation of a ring structure with 2 DP/PA couplers FDC-157-0, and up to 8 AFDs.

The active DP/PA coupler FDC 157-0 supplies the equipotential bonding line. In the event of short-circuit or wire break on the PA main line the active DP/PA coupler supplies the cut equipotential bonding line in both directions. PA field device function remains intact. Repairs can be executed during operation.

Installation with ring redundancy

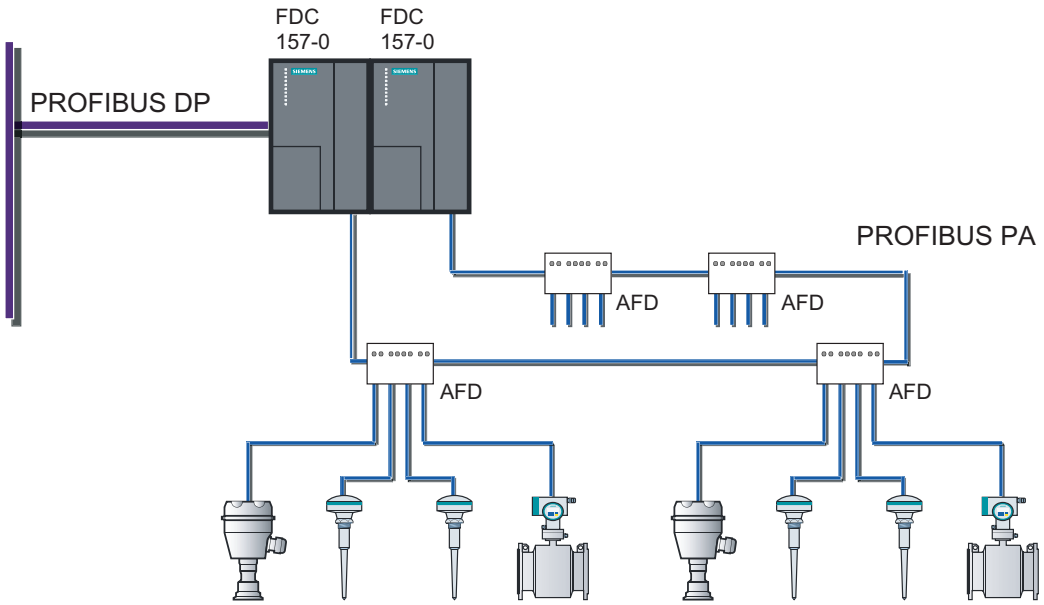

Ring redundancy: Component behavior in the event of errors

Table 3-2 Ring redundancy: Component behavior in the event of errors

Components Error	DP/PA coupler pair	Active field distributor (AFD)	PA field devices	equipotential bonding line
Failure of the energizing DP/PA coupler	• Switchover to partner coupler. • Partner coupler takes over the power supply of the equipotential bonding line.	O. K.	O. K.	O. K.
Short circuit or wire break on the PA main line	• The active energizing DP/PA coupler supplies the cut equipotential bonding line in both directions. • The partner coupler is active conducting.	Isolate and terminate adjacent AFDs.	O. K.	Equipotential bonding line is cut but is still supplied.
Short-circuit on the spur line	O. K.	• Current limit of the AFD is active. • AFD reports failure on the spur line (green LED flashes).	• Non-participating field devices remain O.K. • Field device on the affected spur line fails.	O. K.

Power supply

To ensure availability in redundancy mode we recommend using an autonomous power supply module for each DP/PA coupler.

See also

Active field distributor (AFD) (Page 2-10)

Connections for ring redundancy (Page 5-7)

3.1.3.2 Coupler redundancy with active field splitter (AFS)

Coupler redundancy

The use of a DP/PA coupler pair and of an active field splitter enables redundant mode on the equipotential bonding line.

The active DP/PA coupler FDC 157-0 supplies the equipotential bonding line in this process. Failure of a DP/PA coupler results in switchover to the partner coupler. PA field device function remains intact.

Installation with coupler redundancy

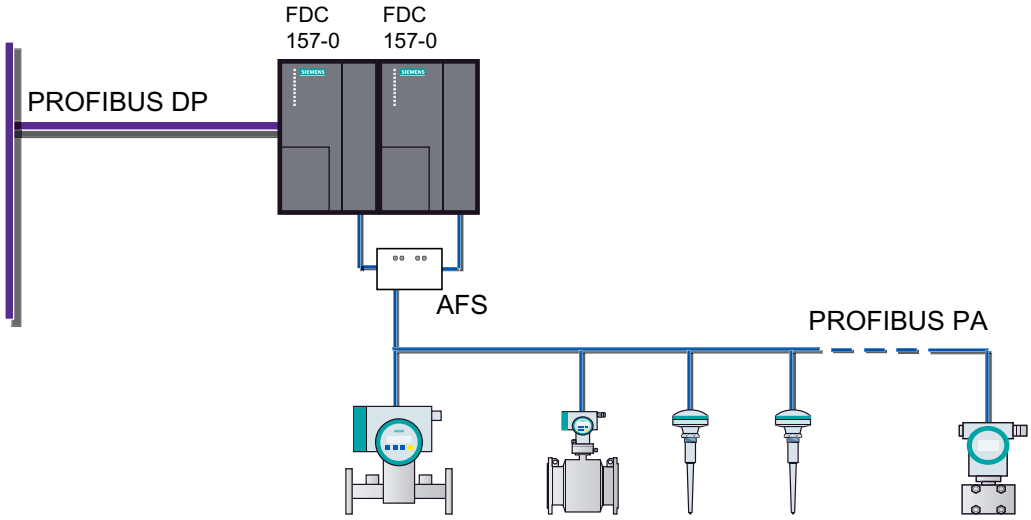

Installation with coupler redundancy and center feed

A cable bushing for looping through the equipotential bonding line is available on the active field splitter (AFS).

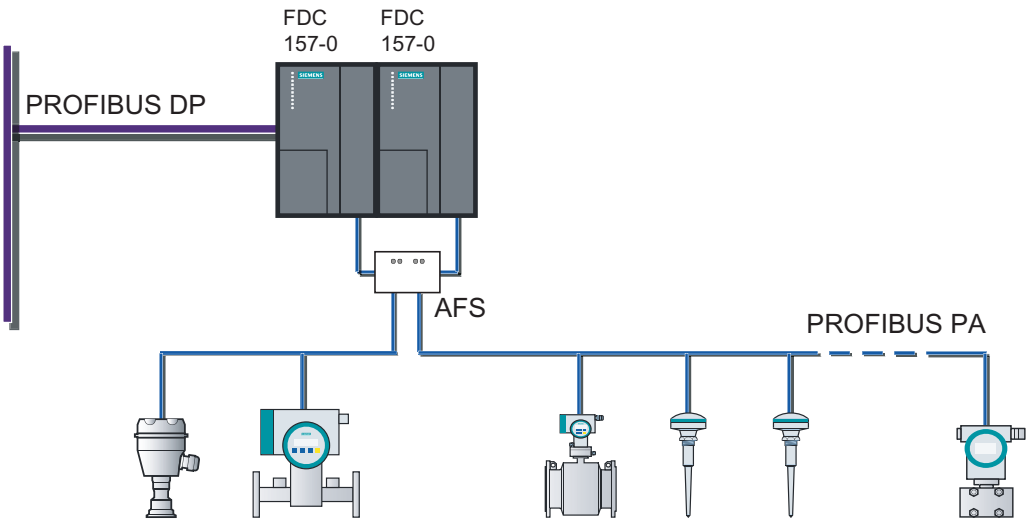

Power supply

To ensure availability in redundancy mode we recommend using an autonomous power supply module for each DP/PA coupler.

See also

Active field distributor (AFS) (Page 2-11)

Connections for coupler redundancy (Page 5-12)

3.1.3.3 Redundancy mode of the DP/PA coupler in the DP/PA link

DP/PA coupler with ring redundancy in the DP/PA link

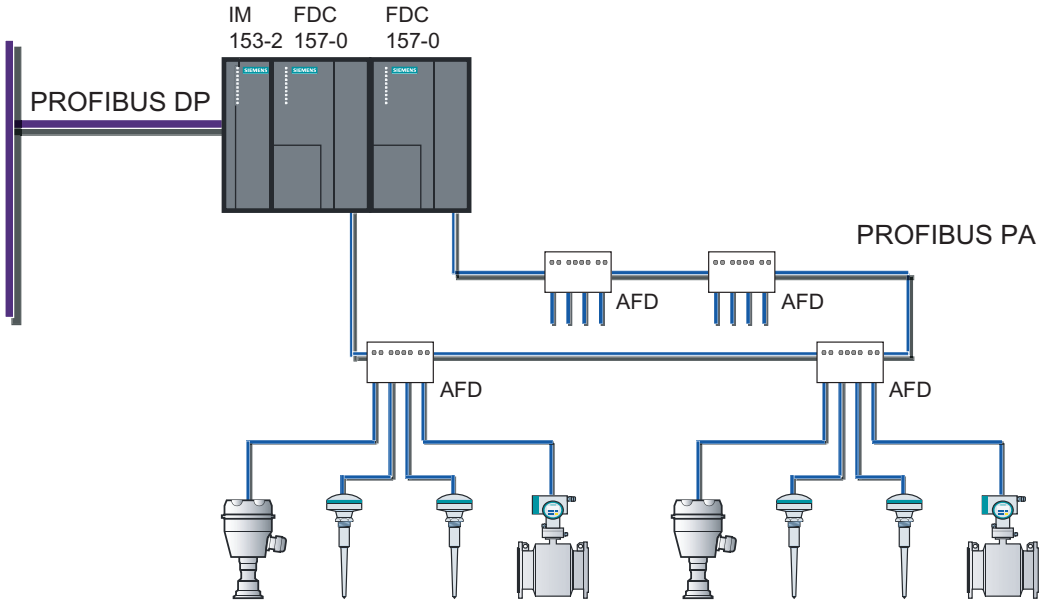

DP/PA coupler with coupler redundancy in the DP/PA link

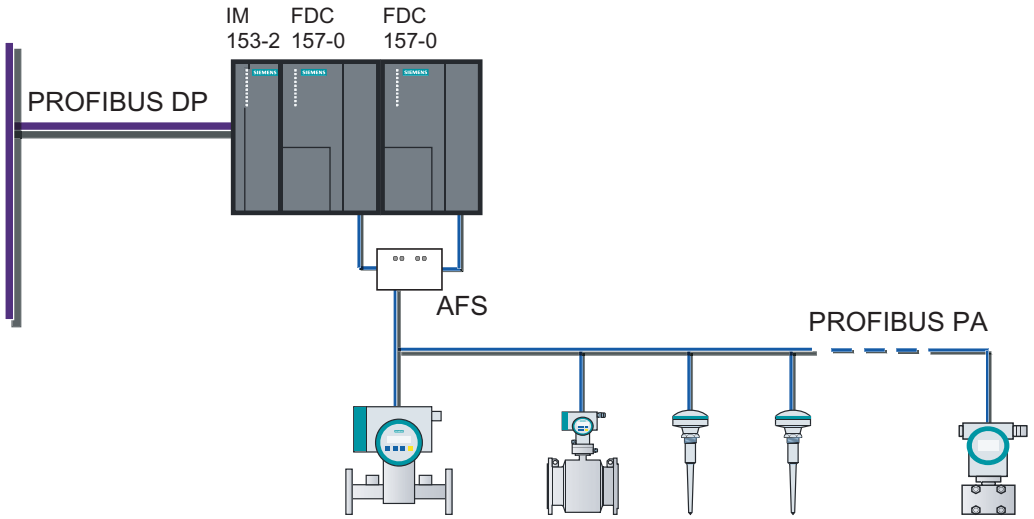

3.1.3.4 Redundancy mode of the DP/PA coupler in the redundant DP/PA link

DP/PA coupler with ring redundancy in the redundant DP/PA link

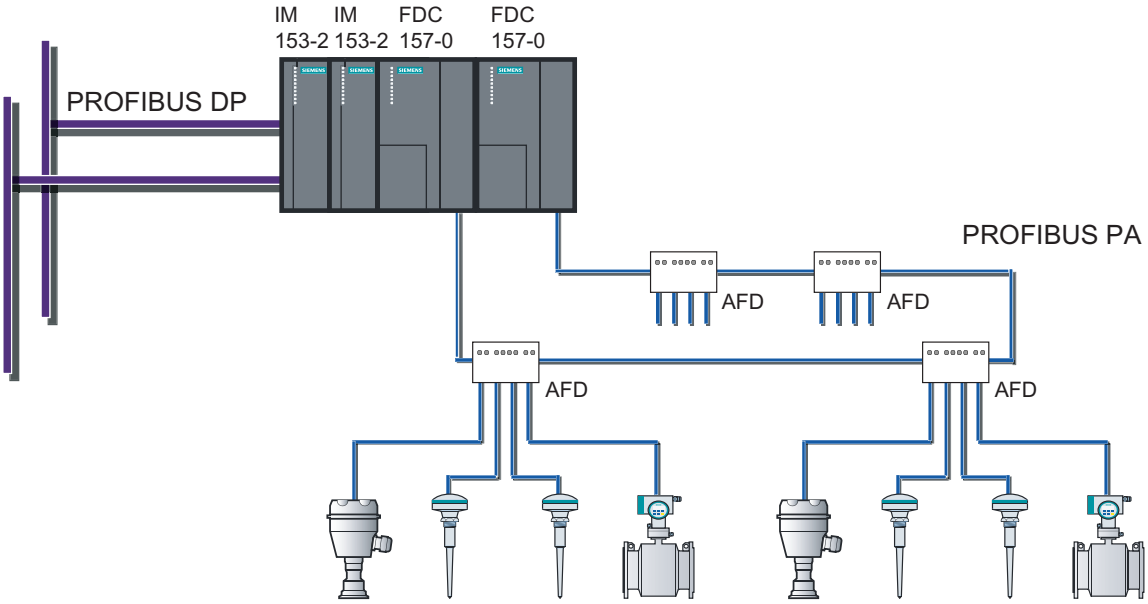

DP/PA coupler with coupler redundancy in the redundant DP/PA link

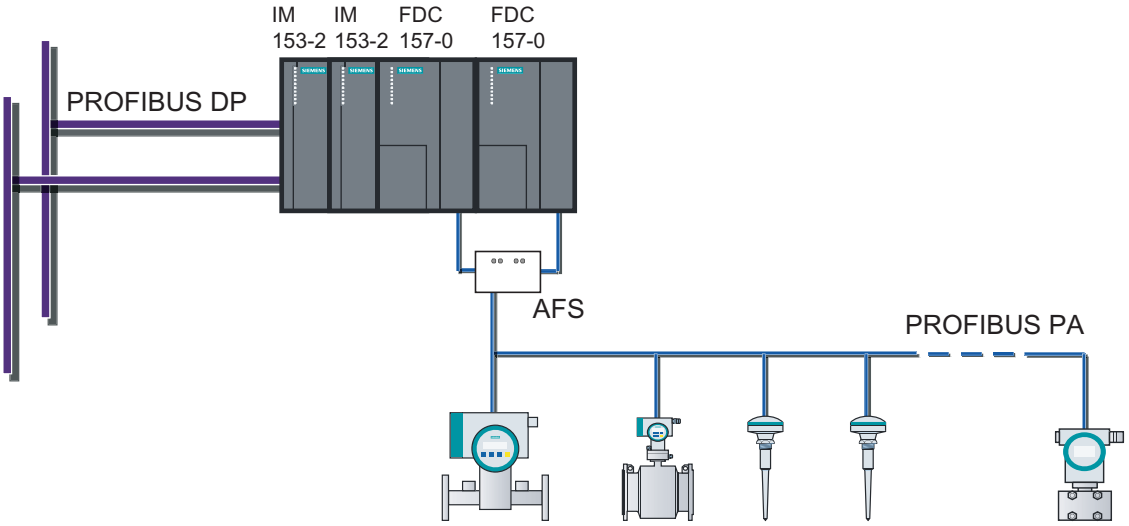

3.1.3.5 Combination of non-redundant and redundant DP/PA couplers

Introduction

You can install a maximum of 5 DP/PA couplers FDC 157-0, of which one coupler pair is installed in redundant mode at the end of the configuration. Mixed mode is possible with the following modules:

- DP/PA coupler (6ES7157-0AC82-0XA0)
- DP/PA coupler Ex [i] (6ES7157-0AD82-0XA0)

DP/PA coupler with ring redundancy in the DP/PA link

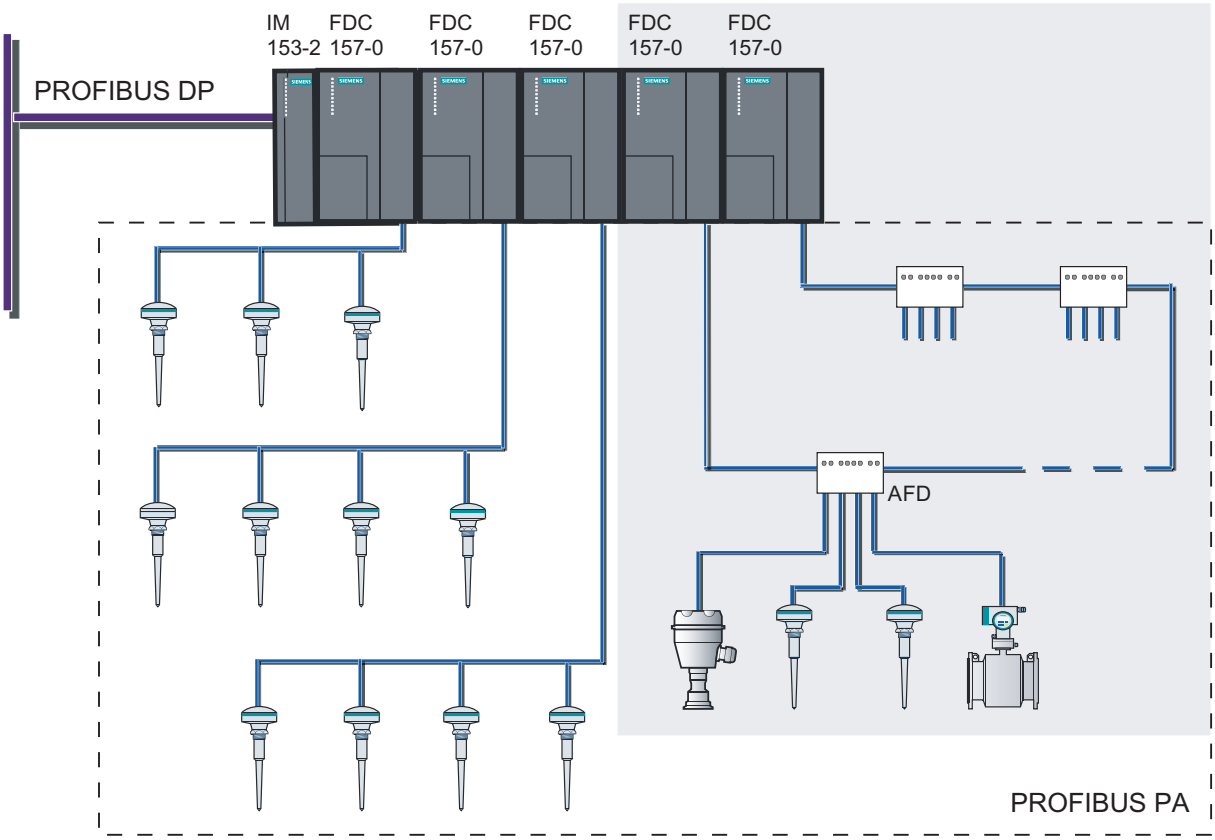

DP/PA coupler with coupler redundancy in the DP/PA link

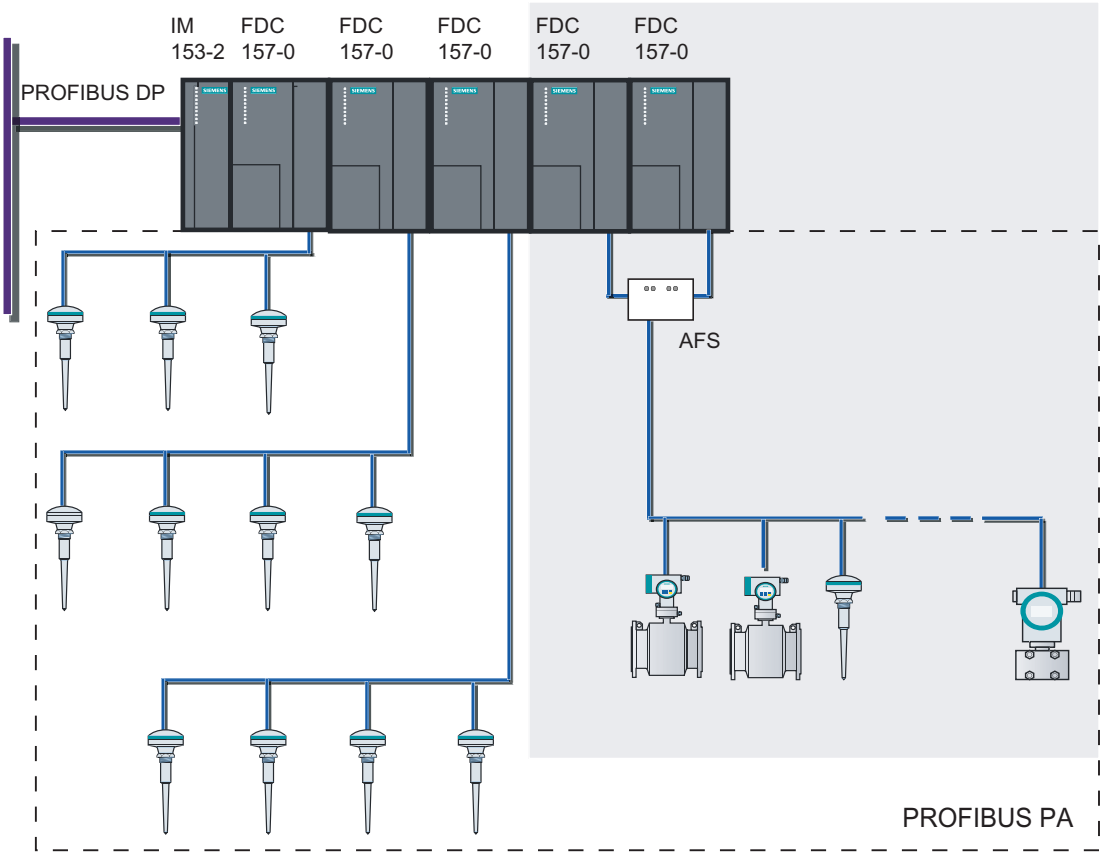

See also

Installation variants (Page 3-1)

3.2 Installation variants with the IM 153-2

3.2.1 Configuration variants

With IM 153-2Bxx1 you can configure

- a DP/PA link with a maximum of 5 DP/PA couplers
- a Y link with a Y coupler

Das IM 153-2BA81 is also a spare part for IM 157 (6ES7157-0AA8x-0XA0).

Moreover, the IM 153-2Bxx1 can be used as an interface module for the distributed I/O device ET 200M. Information on this is to be found in the *Distributed I/O device ET 200M*.

You will find the product manual on the Internet at:

http://support.automation.siemens.com

Search for the entry with the number 1142798.

Configuration variants in the non-outdoor sector

You can implement the combinations listed in the following table in the non-outdoor area using the existing hardware.

Table 3-3 Configuration variants for the links in the non-outdoor sector

non-redundant configuration	redundant configuration
• DP/PA coupler • IM 153-2 + bus couplers + DP/PA couplers (max. 5 units) • BM PS/IM + PS + IM 153-2 + BM DP/PA (max. 5 units) + DP/PA couplers (max. 5 units) • BM IM/IM (7HD10 / 7HD80) + IM 153-2 + BM DP/PA (max. 5 units) + DP/PA couplers (max. 5 units)	• BM IM/IM (7HD10 / 7HD80) + 2x IM 153-2 + BM DP/PA (max. 5 units) + DP/PA couplers (max. 5 units) • BM IM/IM (7HD10 / 7HD80) + 2x IM 153-2 + BM Y coupler + Y coupler
In the table IM 153-2 stands for: • IM 153-2 (6ES7153-2BA01-0XB0) • IM 153-2 (6ES7153-2BA81-0XB0)	

Configuration variants in the non-outdoor sector

You can implement the combinations listed in the following table in the outdoor area using the existing hardware.

Table 3-4 Configuration variants for the links in the outdoor sector

non-redundant configuration	redundant configuration
• DP/PA coupler • IM 153-2 + bus couplers + DP/PA couplers (max. 5 units) • BM IM/IM (7HD80) + IM 153-2 + BM DP/PA (max. 5 units) + DP/PA couplers (max. 5 units)	• BM IM/IM (7HD80) + 2x IM 153-2 + BM DP/PA (max. 5 units) + DP/PA couplers (max. 5 units)
In the table IM 153-2 stands for IM 153-2 (6ES7153-2BA81-0XB0)	

References

- For detailed information on the functions and features of the IM 153-2, please refer to the chapters *Functions* and *Compatibilities*.
- The IM 153-2Bxx1 is not only the interface module for the bus couplers DP/PA link and Y link, but also for ET 200M. For the configuration variant options please refer to the *Distributed I/O device ET 200M* operator manual.

See also

Installation variants (Page 3-1)

3.2.2 Detecting the configuration variant by means of the IM 153-2

During start-up, the IM 153-2 automatically detects which structure variant (ET 200M or DP/PA-link or Y-link) it is being used in. The IM 153 2 determines its functionality in accordance with this.

Notice

The following structure variants ("mixed structures") are **not** permissible:

- Input / output modules and coupler modules in one structure
- Bus modules BM 2 x 40 / BM 1 x 80 and BM DP/PA / BM Y coupler in one structure

---

Mounting

4

4.1 Mounting rules for bus couplings

Mounting position

The IM 153-2, DP/PA coupler and Y coupler module can be mounted in a vertical or horizontal position.

Warning

Open equipment

The IM 153-2 DP/PA coupler and Y coupler modules are open equipment. This means that they may only be mounted in enclosures, cabinets. or electrical service rooms that can only be accessed by using a key or a tool. Only authorized personnel may have access to the enclosures, cabinets or electrical service rooms.

Mounting system

The IM 153-2 DP/PA coupler and Y coupler modules are mounted on rails for the S7 mounting system. Free space of 40 mm must be maintained above and below the modules for trouble-free mounting.

Additional instructions for installing modules in the S7 mounting system are available in the installation manual *S7-300 Automation System, Installation: CPU 312 IFM - 318-2 DP*.

You will find the installation manual on the Internet at:

http://support.automation.siemens.com

Look for item number 15390415.

Installation location

The DP/PA Ex [i] coupler or the DP/PA link with DP/PA Ex [i] coupler can be operated in hazardous areas, zone 2, if they are installed in a suitable enclosure. The bus cable for PROFIBUS PA may lead from the hazardous area zone 2, into the following zones:

- in the case of 6ES7157-0AD81-0XA0 into zone 0
- in the case of 6ES7157-0AD82-0XA0 into zone 0 /zone 20

Danger

In the case of DP/PA coupler Ex [i] 6ES7157-0AD82-0XA0 the intrinsically safe PROFIBUS PA is approved for the following intrinsically safe electrical equipment:

- Device category 1G, 2G and 3G for zones 0, 1, and 2

- Device category 1D, 2D and 3D for zones 20, 21, and 22

As a PROFIBUS node you can use the DP/PA coupler Ex [i] of device category 3G in zone 2-type hazardous areas (or in the safe area).

If you want to use the DP/PA coupler Ex [i] in zone 21 or 22, then you must install it in an enclosure that is certified and approved for these zones.

Enclosure for zone 2

The DP/PA coupler Ex [i], or the DP/PA link with DP/PA coupler Ex [i] must be installed in an enclosure with minimum degree of protection IP 54. A manufacturer's declaration for zone 2 must be submitted for the enclosure (in accordance with EN 60079-15).

Use the following threaded cable glands:

- Power supply and PROFIBUS DP Ex i: Cable gland with manufacturer's declaration for zone 2
- PROFIBUS PA Ex i: Degree of protection EEx i

Danger

Under some circumstances, sparks capable of ignition or unacceptable surface temperatures can occur during installation.

Never install under explosive conditions!

Switch off the voltage supply to the plant and adhere to the safety regulations.

You can obtain enclosures for zone 2 from:

Siemens AG
A&D SE S21
Siemensallee 84
D-76187 Karlsruhe

Telephone: ++49 (0)721 / 595-3776
Fax: ++49 (0)721 / 595-4711
E-mail: helmut.heib@siemens.com

4.2 Mounting rules for active field distributors

Mounting position

The AFDs and AFSs can be mounted as desired.

Mounting system

The active AFDs and AFSs can be screwed onto a level surface, or with an adapter they can be mounted on a mounting rail.
Free space of 60 mm must be maintained above and below the modules for trouble-free mounting.

4.3 Mounting the DP/PA coupler

4.3.1 Mounting DP/PA coupler for non-redundant mode

Components required

- Mounting rail for the S7 mounting system
- DP/PA coupler

Mounting the DP/PA coupler

Note

If you operate multiple DP/PA couplers in one rack in stand-alone mode without ring redundancy and coupler redundancy, then you cannot connect the DP/PA coupler via bus connector nor can you connect it via bus modules.

1. Hook the DP/PA coupler into the S7 mounting rails and swing it down.
2. Screw the DP/PA coupler tight.

Dismantling the DP/PA coupler

Remove the DP/PA coupler in the reverse sequence.

If the DP/PA coupler is already in operation, switch off the 24 V DC power supply for the DP/PA coupler prior to removal.

4.3.2 Mounting the DP/PA coupler for redundancy mode

Installation with bus modules

For operation with ring redundancy or coupler redundancy the 2 DP/PA couplers FDC 157-0 must be installed with the BM FDC 157-0 bus module.

Combination with non-redundant DP/PA couplers

A combination of non-redundant and redundant DP/PA couplers is possible. You can install a maximum of 5 DP/PA couplers FDC 157-0, of which one coupler pair is installed in redundant mode at the end of the configuration.

Components required

- Mounting rail for installation with active bus modules ("Mounting rail for module exchange in operation")
- For ring redundancy or coupler redundancy:
  - Bus module BM FDC 157-0
  - Maximum 2 DP/PA couplers FDC 157-0
- Optional for non-redundant DP/PA couplers:
  - Bus module BM DP/PA coupler
  - Maximum 3 DP/PA couplers FDC 157-0

Mounting bus modules and modules

1. First hook the BM DP/PA coupler bus module, and then the DP/PA redundant bus module into the mounting rail and press them into the mounting rail.
2. Slide the bus modules together, so that the module connections have contact.
3. Insert the DP/PA couplers in the bus modules. Use the lateral guides of the bus module to do so.
4. Screw the modules tight. This also fixes the bus modules to the rail.

Removing bus modules and modules

Remove the DP/PA coupler in the reverse sequence.

If the device is already in operation then disconnect its 24-V DC power supply beforehand.

4.3.3 Swapping DP/PA couplers FDC 157-0

Introduction

Swapping a DP/PA coupler 157-0 is possible during operation with ring redundancy or coupler redundancy. The PA field devices that are connected to the redundant DP/PA coupler remain in operation.

Prerequisite

The following prerequisites must be satisfied to remove a DP/PA coupler FDC 157-0 during operation.

- The ACT LED of the DP/PA coupler cannot be illuminated. If the ACT LED is illuminated, then multiple PA field devices can fail.
- The power supply of the DP/PA coupler FDC 157-0 must be disconnected.

Swapping modules

Notice

Removing a DP/PA coupler FDC 157-0

It is only possible to remove a DP/PA coupler FDC 157-0 if it is de-energized.

Prior to removing an FDC 157-0 DP/PA coupler, disconnect its 24 V DC power supply.

Notice

Failure of a DP/PA coupler FDC 157-0

If you remove an FDC 157-0 DP/PA coupler under voltage then the overvoltage protection can permanently respond. You can reset this switch-off if you turn off the mains for at least 10 seconds.

Prior to removing an FDC 157-0 DP/PA coupler, disconnect its 24 V DC power supply.

4.4 Mounting active field distributors

4.4.1 Screw the active field distributor to the substrate

Prerequisite

- The substrate must be level, with load-bearing capacity, and it must be vibration free.
- Select appropriate fixing accessories for the substrate.
- Ensure that there is free space of 60 mm both to the side and below the modules for connecting the PA main lines and spur lines.

Tools required

- Cross-tip screwdriver size 4
- 2 fixing screws M4; dowels depending on the substrate
- Screwdriver suitable for the screws used

Procedure

1. Remove the 4 screws of the housing cover using a crosstip screwdriver.
2. Screw the lower part of the enclosure tightly to the substrate with two fixing screws. The torque depends on the fixing screws used.
3. Screw the lid onto the upper part of the enclosure with the 4 cross-tip screws. Torque 2.0 Nm.

See also

Active field distributor (AFD) (Page 2-10)

Active field distributor (AFS) (Page 2-11)

4.4.2 Mounting active field distributors on the mounting rail

Prerequisite

- The mounting rail must be fixed in place.
- Ensure that there is free space of 60 mm both to the side and below the field distributor for connecting the PA main lines and spur lines.

Components required

- Adapter for mounting rails

Tools required

- Cross-tip screwdriver size 4

Procedure

1. Fix the adapter to the rear of the field distributor with the accompanying screws.
2. Hook the adapter into the mounting rail from above.
3. Press the field distributor down until the terminals of the adapter engage.

Dismantling

Press the field distributor down until it frees itself from the mounting rail.

See also

Active field distributor (AFD) (Page 2-10)
Active field distributor (AFS) (Page 2-11)

4.5 Mounting the DP/PA link

4.5.1 Mounting the DP/PA link for non-redundant mode

Components required

- Rail for the S7 mounting system
- IM 153-2
- 1 to 5 DP/PA couplers
- one bus connector for each DP/PA coupler (included with it)
- options for module exchange during operation
  - Bus module BM PS/IM or BM IM/IM
  - Bus module BM; DP/PA coupler

Typical configuration of the DP/PA link

The following figure shows the typical configuration of the DP/PA link with two DP/PA couplers and with front doors open.

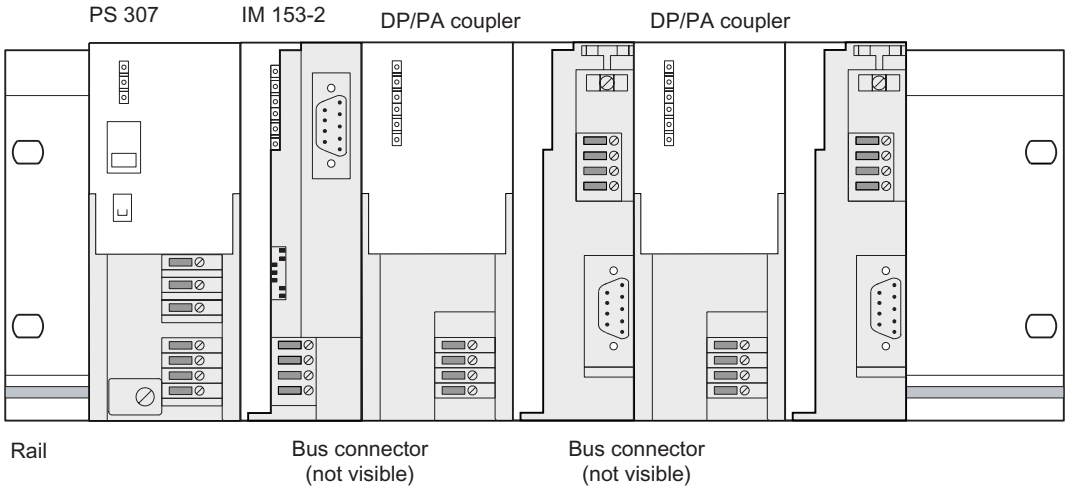

Figure 4-1 Typical configuration of the DP/PA link for non-redundant mode

Installing the DP/PA link

1. Insert the bus connector that is included with the DP/PA coupler onto the IM 153-2.
2. Hook the IM 153-2 onto the S7 rail and swing it downward.
3. Screw the IM 153-2 tight.
4. If appropriate, insert the bus connector of the next DP/PA coupler onto the right-hand side on the DP/PA coupler.
5. Hook the DP/PA coupler onto the the right-hand side next to the IM 153-2 on the S7 rail and swing it downward.
6. Screw the DP/PA coupler tight
7. Repeat steps 4 to 6 for the subsequent DP/PA couplers. For the last DP/PA coupler (of a maximum of 5), do not insert a bus connector prior to installation.

Inserting / removing DP/PA couplers

If you wish to remove or insert DP/PA couplers during operation, you must use busmodules for configuration instead of the bus connectors.

Removing the DP/PA link

To remove the DP/PA link, proceed in the reverse order. Start with the DP/PA coupler installed on the far right.

If the DP/PA link is already in operation, switch off the 24 VDC power supplies prior to dismantling it.

See also

Accessories for PROFIBUS DP (Page A-2)

Accessories for PROFIBUS PA (Page A-3)

4.5.2 Mounting the DP/PA link for redundant operation

Configuration with bus modules

For the redundant mode, the DP/PA link must configured with bus modules.

Components required

- Rail for configuration with active bus modules ("Rail for module change during operation")
- 2 x IM 153-2
- Bus module BM IM/IM
- 1 to 5 DP/PA couplers
- One BM DP/PA coupler bus module per DP/PA coupler

Typical configuration

The following figure shows the typical configuration of the DP/PA link for the redundant mode with two power supply modules and with front doors open.

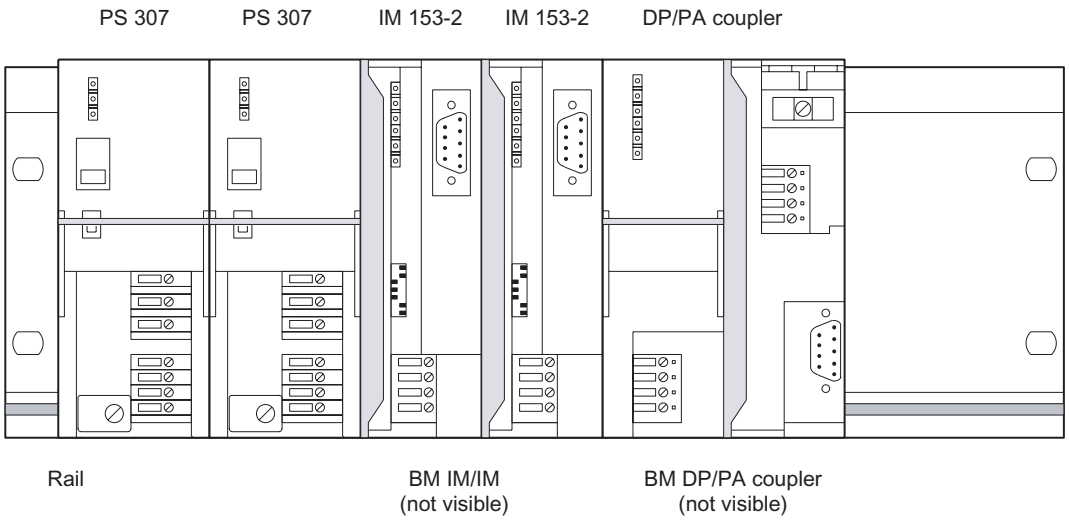

Figure 4-2 Typical configuration of the DP/PA link for the redundant mode

Installing bus modules and modules

1. Hook the lower edge of the BM IM/IM bus module onto the rail, press it into the rail (a) and push it to the left until it engages (b).

   If you are using the 530 mm rail and position the BM IM/IM in the right-hand engaged position, you can install two additional PS 307; 2A or one PS 307; 5A to the left of the bus module.

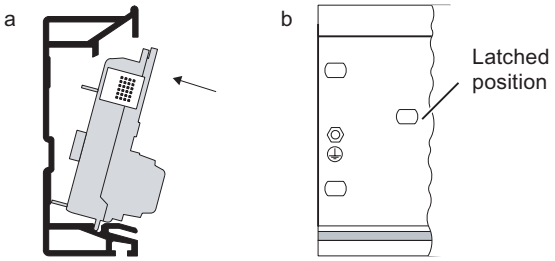

2. Hook the BM DP/PA coupler bus modules onto the rail and press them down into the rail.
3. Push the bus modules together so that the module connections are in contact.
4. Insert the two IM 153-2 into the BM IM/IM bus module.
5. Inser the DP/PA coupler into the BM DP/PA coupler bus module. To do so use the lateral guides of the bus module.
6. Screw the modules tight. This also fixes the bus modules to the rail.

Removing and inserting modules

It is possible to remove and insert modules on S7-400H during operation. The following special characteristics should be noted:

- An IM 153-2 may only be removed and inserted if it is de-energized. Switch off the 24 VDC supply to the IM 153-2 for this purpose. To prevent the underlying master system from failing the DP/PA link should be configured with independently switchable voltage supplies to the two IM 153-2 (for example by using two power supply modules).
- There is no restriction on removing and inserting the DP/PA coupler, but it causes the nodes connected to it to fail.

Removing bus modules and modules

To remove the DP/PA link, proceed in the reverse order.

If the device is already in operation, switch off the 24 VDC power supplies prior to removing it.

See also

Accessories for PROFIBUS DP (Page A-2)

Accessories for PROFIBUS PA (Page A-3)

4.6 Mounting the Y link

Configuration with bus modules

The Y link must always be configured with bus modules.

Components required

- Rail for configuration with active bus modules ("Rail for module change during operation")
- 2 x IM 153-2
- Bus module BM IM/IM
- Y coupler
- Bus module BM Y coupler

Typical configuration

The following figure shows the typical configuration of Y link with two power supply modules and with front doors open.

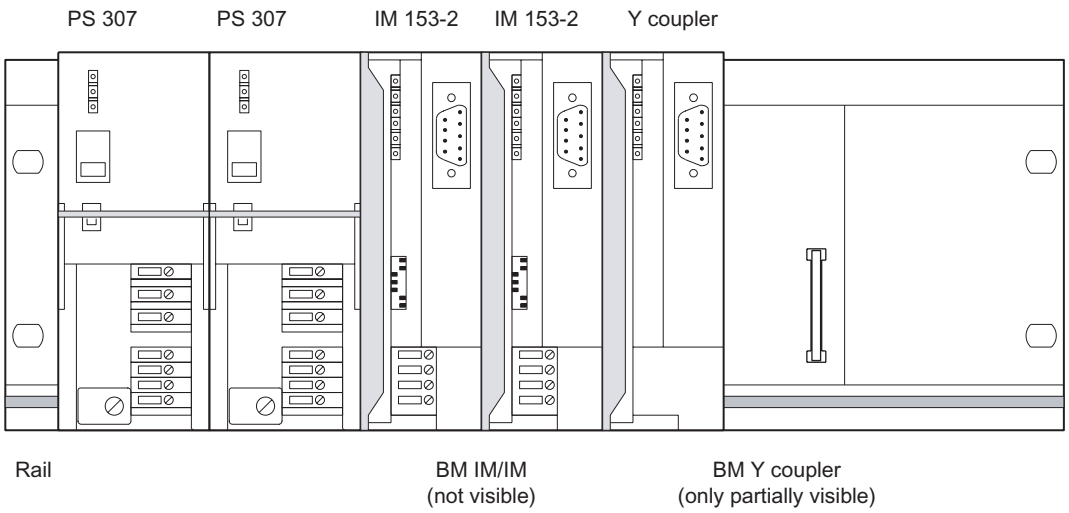

Figure 4-3 Typical configuration of the Y link

Installing bus modules and modules

1. Hook the lower edge of the BM IM/IM bus module onto the rail, press it into the rail (a) and push it to the left until it engages (b).

   If you are using the 530 mm rail and position the BM IM/IM in the right-hand engaged position, you can install two additional PS 307; 2A or one PS 307; 5A to the left of the bus module.

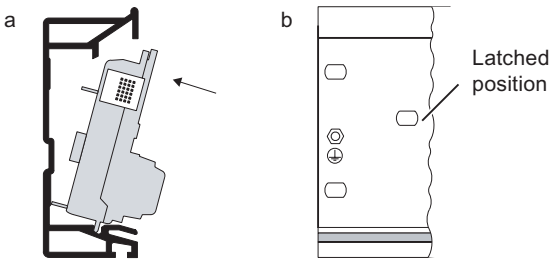

2. Hook the BM Y coupler bus module onto the rail and press it down into the rail.
3. Push the bus modules together so that the module connections are in contact.
4. Insert the two IM 152-2 into the BM IM/IM bus module.
5. Insert the Y coupler into the BM Y coupler bus module. To do so use the lateral guides of the bus module.
6. Screw the modules tight. This also fixes the bus modules to the rail.

Removing and inserting modules

It is possible to remove and insert modules on S7-400H during operation. The following special characteristics should be noted:

- An IM 153-2 may only be removed and inserted if it is de-energized. Switch off the 24 VDC supply to the IM 153-2 for this purpose. To prevent the underlying master system from failing the Y link should be configured with independently switchable voltage supplies to the two IM 153-2 (for example by using two power supply modules).
- There is no restriction on removing and inserting the Y coupler, but it causes the nodes connected to it to fail.

Removing bus modules and modules

To remove the Y link, proceed in the reverse order.

If the device is already in operation, switch off the 24 VDC power supplies prior to removing it.

See also

Accessories for PROFIBUS DP (Page A-2)

4.7 Setting the PROFIBUS address of the IM 153-2

Definition

For the purpose of unique identification on PROFIBUS DP, each node must be given a PROFIBUS address.

Rules

The following rules apply to the PROFIBUS address of the IM 153-2 in the higher level DP master system:

- Permitted PROFIBUS addresses: 1 to 125
- Each PROFIBUS address may only be assigned once in the DP master system.
- In the redundant mode the same PROFIBUS address must be set for both IM 153-2.

Required Tools

To set the PROFIBUS address you require a 3 mm screwdriver.

Procedure

1. Open the front door of the IM 153-2
2. Use a screwdriver to set the required PROFIBUS address. The PROFIBUS address is the sum of the values of all of the switches that are in the "ON" position (switch set to the right).

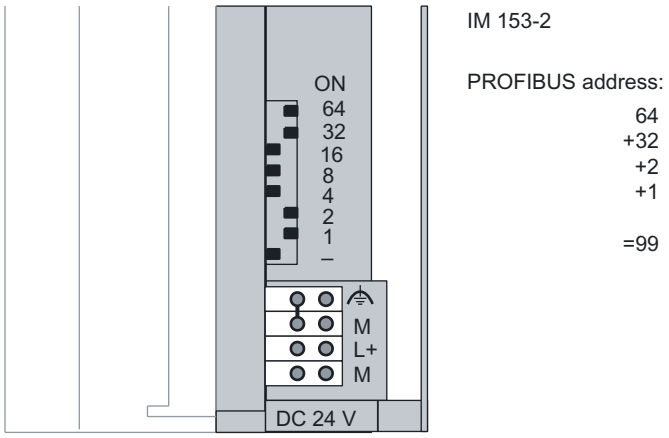

Figure 4-4 Example for setting the PROFIBUS address

Changing the PROFIBUS address

You can change the PROFIBUS address that has been set at any time. However, the IM 153-2 does not apply the new setting until the 24 VDC supply has been switched off / on.

Connecting 5

5.1 Electrical isolation and grounding

Introduction

You can wire the 24 V power supply for the described modules as a grounded or ungrounded configuration, depending on the requirements of your system configuration.

Features of the IM 153-2

- The S7 backplane bus and the 24 V power supply are electrically bound
- PROFIBUS DP is electrically isolated from the 24 V power supply and from the S7 backplane

Features of the DP/PA coupler

- PROFIBUS DP and PROFIBUS PA are electrically isolated from the 24 V power supply of the DP/PA coupler.
- PROFIBUS DP and PROFIBUS PA are electrically isolated from one another

Features of the Y coupler

- The PROFIBUS DPmaster system is electrically isolated from the S7 backplane

5.1.1 General Rules and Regulations for Operation

Introduction

If they are part of plants or systems the modules described require adherence to specific rules and regulations depending on the application.

This chapter gives an overview of the most important rules you have to obey in order to integrate them safely in a plant or system.

Specific application

Please observe the safety and accident prevention regulations applying to specific applications, for example, the machine protection guidelines.

EMERGENCY-OFF devices

In all operating modes of the plant or system, EMERGENCY-OFF devices that conform to IEC 60204 *Safety of machinery – electrical equpment of machines* must remain effective.

System startup after certain events

The table below shows what you have to observe when restarting a plant after specific events.

During …	…
• Start-up following a power drop or failure • Start up after bus communicaton has been interrupted	Dangerous operating states must not be permitted to occur. If necessary force an emergency stop!
• Start-up after unlocking the EMERGMENCY OFF device • Start-up without the DP master addressing the slaves	must not give rise to an uncontrolled or undefined start-up.

24 VDC supply

The table shows what you must pay attention to with regard to the 24 V supply.

For ...	You must give heed to ...	
Buildings	External lightning protection	Make provision for lightning protection (for example lightning arresters
24 VDC supply lines, signalling lines	Internal lightning protection	
24 VDC supply	Safe extra-low voltage with safe electrical isolation (SELV)	

Protection from external electrical influences

The table below shows how you must protect your system against electrical interference or faults.

For...	You must ensure that ...
All plants or systems in which the modules are integrated	The plant or system is connected to the protective conductor so that the electromagnetic interference is discharged.
Connecting cables, signalling and bus lines	The arrangement of the wiring and installation are correct
Signalling and bus lines	Line or conductor breakage does not cause undefined plant or system states.

Shielding braid of the PROFIBUS cable

The shielding braid of the PROFIBUS cable must be placed on a grounded shield bus.

- Affix the shielding braids with metal cable clamps
- The clamp must clasp around a large portion of the shield and provide good contact.
- Attach the screen to a shield bus directly after the point where the cable enters the cabinet.

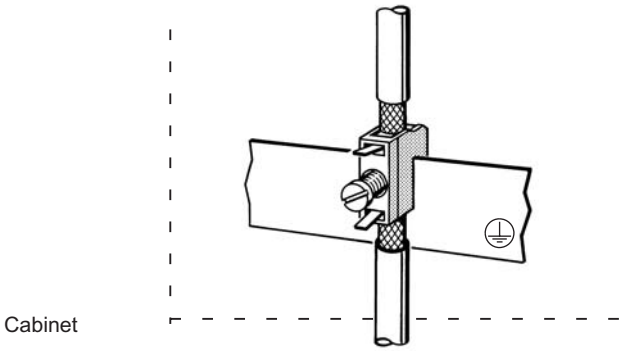

Figure 5-1 Shielding braid of the PROFIBUS cable on a grounded shield bus

5.1.2 Earthing the field distributor

Tools required

- Allen key size 3

Required accessories

- Earthing cable 4.0 mm^2

Earthing the active field distributors

1. Strip the insulation of the earthing cable to 8 mm.
2. Use the Allen key to remove the Allen screws on the field distributor.
3. Use the cable clip to fix the earthing cable to the field distributor.
4. Tighten the two Allen screws.
5. Place the shielding on a shielding bus.

5.1.3 Operating with grounded supply

Definition: Grounded incoming supply

In the case of grounded incoming supplies, the neutral conductor of the supply line is grounded. A single ground fault between a live conductor and ground or a grounded part of the installation results in the protective devices being tripped.

Components and protective measures

Various components and protective measures are specified for assembling a full installation. The type of components and the degree to which the protective measures are mandatory depend on which DIN VDE regulation applies to your system configuration.

- Main switch: DIN VDE 0100 part 460
- Isolator: DIN VDE 0113 part 1

Operating with grounded supply

The figure below shows the position of the modules in the overall configuration with the supply from a TN-S system. In the case of a configuration with grounded reference potential, interference currents that occur are discharged to the protective conductor.

Comment: The arrangement of the power supply connections represented here does not correspond to the actual arrangment on the modules; it was selected for the purpose of clarity.

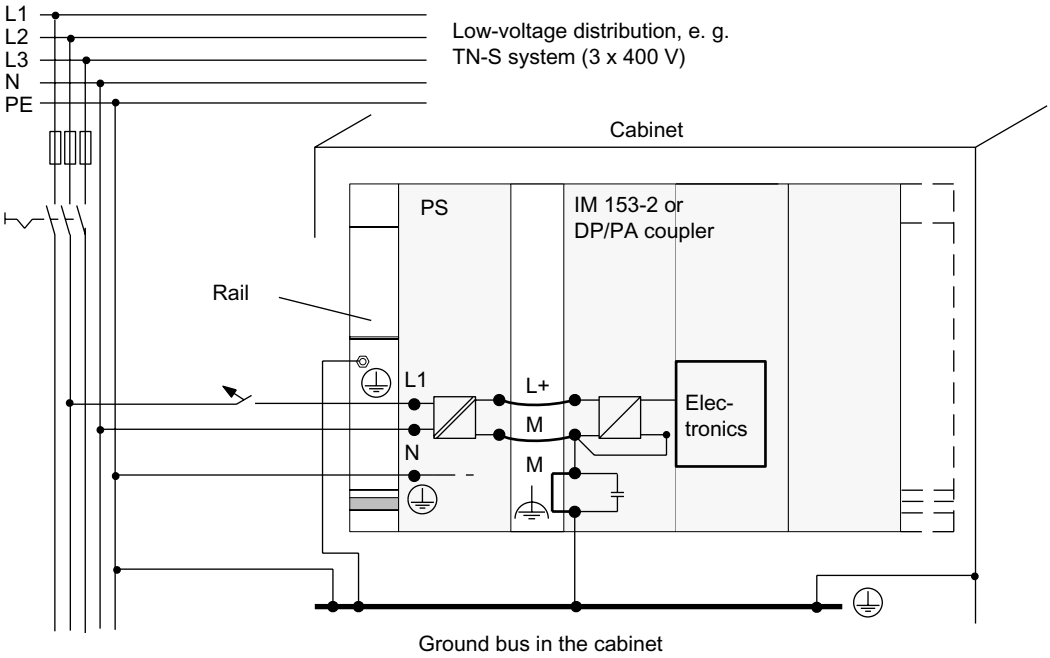

Figure 5-2 Configuration with a grounded supply

5.1.4 Operation with ungrounded reference potential

Application

With extensive plants it may become necessary to operate the modules with ungrounded reference potential (for example for the purpose of ground fault monitoring). This is the case in the chemicals industry or power plants, for example.

Discharging interference current

When operating with ungrounded reference potential, interference currents that arise are discharged via RC networks integrated into the IM 153-2 and DP/PA couplers to the protective conductor (refer to figure below).

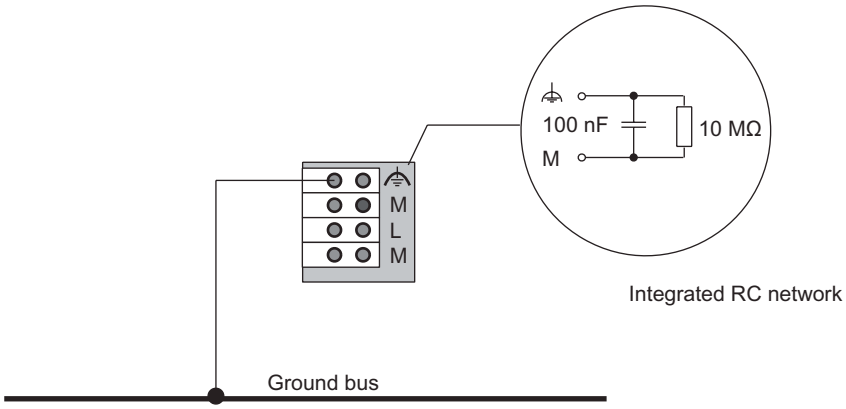

Figure 5-3 Configuration with ungrounded reference potential

5.2 Connecting DP/PA couplers

5.2.1 Wiring the DP/PA coupler for stand-alone mode

Connections of the DP/PA coupler

The figure below shows all the connections you must create from and to the DP/PA coupler for stand-alone operation:

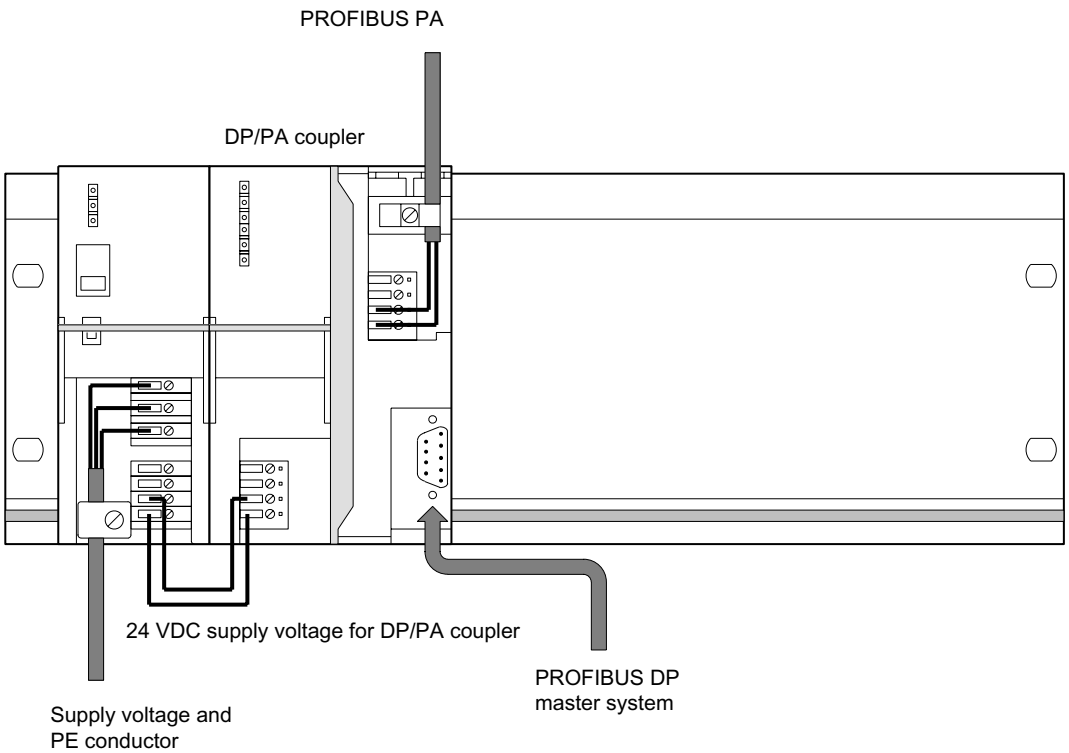

Figure 5-4 DP/PA coupler connections for stand-alone operation

5.2.2 Connecting DP/PA couplers for ring redundancy

5.2.2.1 Connections for ring redundancy

Connections of the DP/PA coupler with ring redundancy

The following fig. shows all connections that you must establish for operation of the DP/PA coupler in ring redundancy in a redundant DP/PA link.

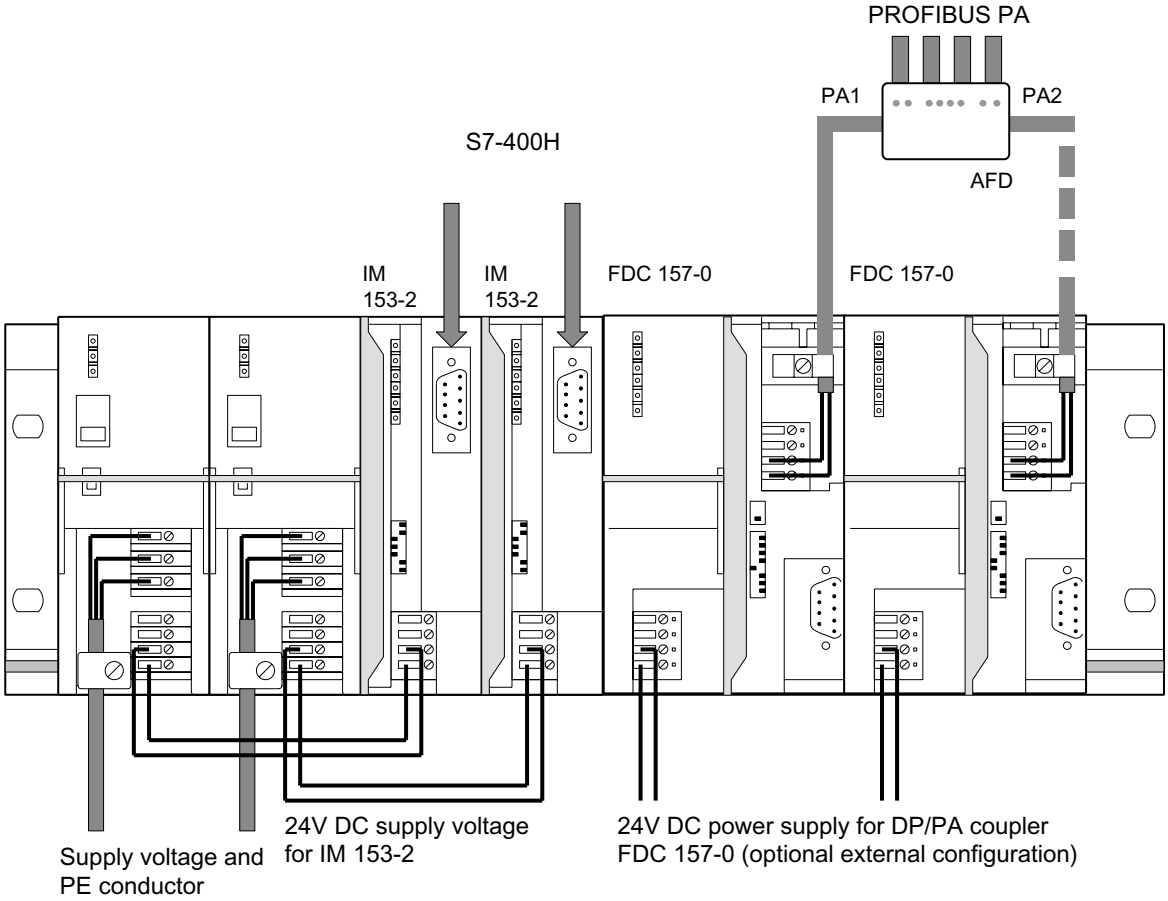

Figure 5-5 Connections - DP/PA coupler with ring redundancy in a redundant DP/PA link

See also

Ring redundancy with active field distributor (AFD) (Page 3-4)

5.2.2.2 Connecting the PROFIBUS PA to the active field distributor (AFD)

Introduction

The PROFIBUS PA cables are introduced into the enclosure via cable glands.

- The PA main line is introduced via PA1 and PA2.
- The spur lines to to PA field devices via X1 to X4.

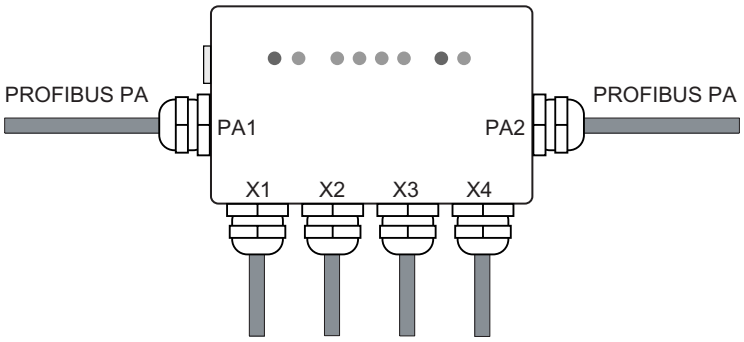

Basic procedure

1. Prepare PROFIBUS PA cable.
2. Open the field distributor.
3. Feed PROFIBUS PA cable via the enclosures.
4. Connect the cables to the terminal block.
5. Close field distributor.

Prerequisite

- Active field distributor is mounted.

Tools required

- Cross-tip screwdriver size 4
- Open-end wrench 17 mm
- Screwdriver with 3 mm blade
- Small knife, end-cutting nipper or FC stripping tool

Required accessories

- PROFIBUS PA cable (cable type A)

Prepare PROFIBUS PA cable.

1. Remove the cable gland from the field distributor with the open-end wrench.
2. Thread the clamping screw and the inside part of the gland with the conical nipple onto the unprepared PA cable.
3. Strip the PA cable as shown in the Fig.

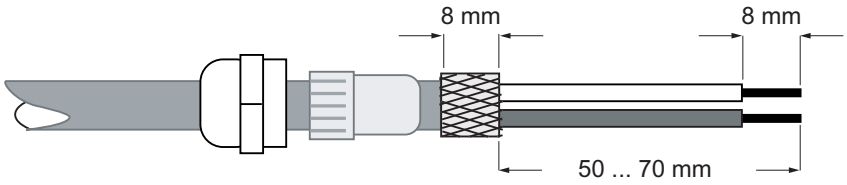

4. Push the screening braiding over the inner part of the gland. To ensure electrical contact to the enclosure, the braided shield must cover the inner part.

Feed PROFIBUS PA cable via the enclosure.

1. Remove the 4 screws of the housing cover using a crosstip screwdriver.
2. Thread the PA cable for the spur lines to the field devices through the cable glands X1 to X4.
3. Thread the PA cable for the PA main lines through the cable glands PA1 and PA2..
4. Tighten the cable glands on the enclosure. Torque 6.25 Nm.

Notice

Impairment to the degree of protection

The degree of protection can be impaired if you over-tighten the cable glands.

Sealing unused cable glands

Seal unused cable glands with a plug for cable glands This is the only way to ensure degree of protection IP66.

See also

Active field distributor (AFD) (Page 2-10)

5.2.2.3 Connecting the wring to the terminal block.

Introduction

Connect the wiring of the PROFIBUS PA cable to the terminal block in the active field distributor via the cage-clamp method.

Tools required

- Screwdriver with 3 mm blade

Fixing the wiring on the cage-clamp contact

Caution

The cage-clamp will be destroyed if handled incorrectly

The cage-clamp will be destroyed if you insert the screwdriver into the opening for the wiring.

Only insert the screwdriver in the **rectangular openings** of the terminal block.

1. With a screwdriver press the cage-clamp in the rectangular opening down, and keep it depressed. Ensure that the wires have the correct polarity.
2. Insert the wiring into the round opening of the appropriate cage-clamp until the stop.
3. Remove the screwdriver from the cage-clamp. The wiring is held in place by the cage-clamp contact.

5.2.2.4 Pin assignment for active field distributor (AFD)

Extending systems with AFDs

If the system is already operating with ring redundancy, then first connect the spur lines to the PA field devices, and then connect the PA main lines. You will thus avoid multiple errors on the PA main line.

Connection rules

Note

Shield connection

If you use the cable glands of the active field distributor then the shield connection via the terminal S is not required.

Caution

Failure of the equipotential bonding line

Inadvertent insertion of the PA+/PA- wiring in the terminal S can result in the failure of all PA nodes.

Anschlussbelegung aktiver Feldverteiler AFD

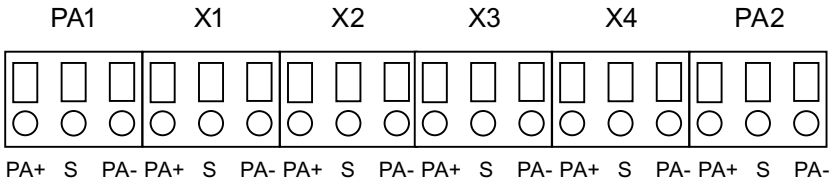

Table 5-1 Pin assignment for active field distributor (AFD)

Connection		Terminal	Assignment
PA1, PA2	PA main line	PA+	Data cable (red)
		S	Shield (not required)
		PA-	Data cable (green)
X1 to X4	Spur lines to the PA field devices	PA+	Data cable (red)
		S	Shield (not required)
		PA-	Data cable (green)

Connecting the active field distributor

1. Place the enclosure lid on the lower part of the enclosure.
2. Tighten the 4 cable glands on the enclosure. Torque 2.0 Nm.

5.2.3 Connecting DP/PA couplers for coupler redundancy

5.2.3.1 Connections for coupler redundancy

Connections of the DP/PA couplers with ring redundancy

The following fig. shows all connections that you must establish for operation of the DP/PA coupler in ring redundancy in a redundant DP/PA link.

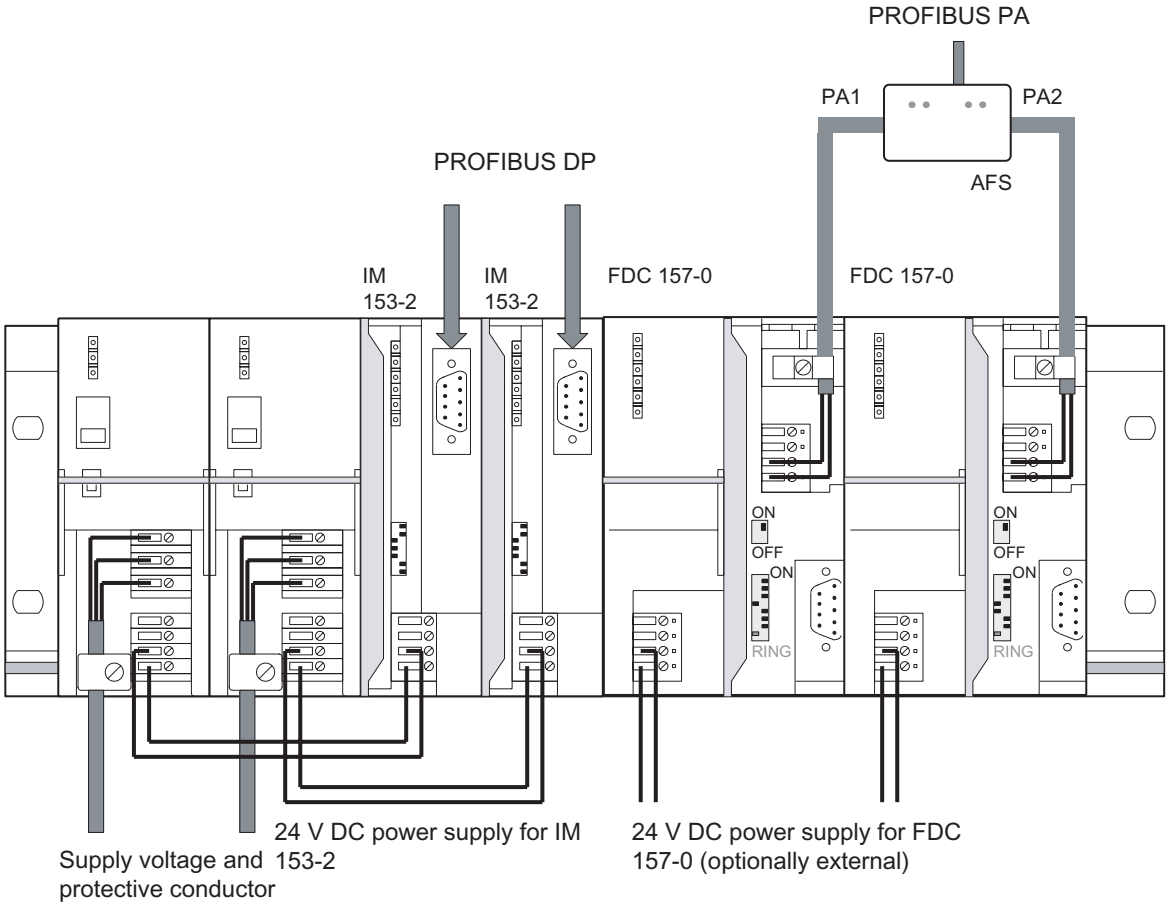

Figure 5-6 Connections - DP/PA coupler with ring redundancy in a redundant DP/PA link

See also

Coupler redundancy with active field splitter (AFS) (Page 3-6)

5.2.3.2 Connecting the PROFIBUS PA to the active field splitter (AFS)

Introduction

The PROFIBUS PA cables are introduced into the enclosure via cable glands.

- The PA main line to the DP/PA couplers via PA1 and PA2.
- The spur line to the equipotential bonding line via X1.

Center feed: The cable gland X2 is available for looping through the equipotential bonding line. The cable gland is factory sealed with a blanking plug.

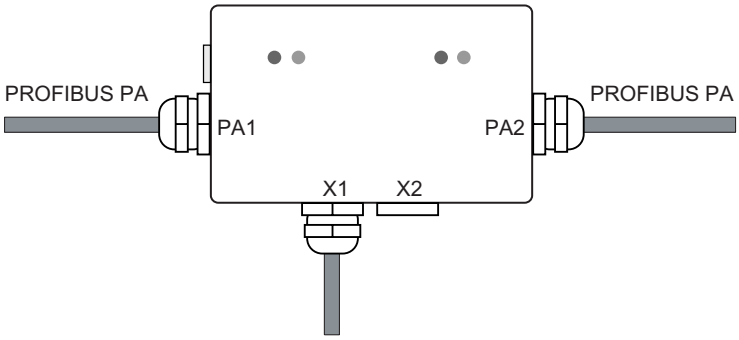

Basic procedure

1. Prepare PROFIBUS PA cable.
2. Open the field distributor.
3. Feed PROFIBUS PA cable via the enclosures.
4. Connect the cables to the terminal block.
5. Close field distributor.

Prerequisite

- Active field distributor is mounted.

Tools required

- Cross-tip screwdriver size 4
- Open-end wrench 17 mm
- Screwdriver with 3 mm blade
- Small knife, end-cutting nipper or FC stripping tool

Required accessories

- PROFIBUS PA cable (cable type A)

Prepare PROFIBUS PA cable.

1. Remove the cable glands from the field distributor with the open-end wrench.
2. Thread the clamping screw and the inside part of the gland with the conical nipple onto the unprepared PA cable.
3. Strip the PA cable as shown in the Fig.

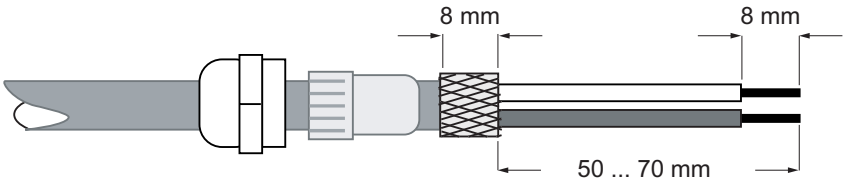

4. Push the screening braiding over the inner part of the gland. To ensure electrical contact to the enclosure, the braided shield must cover the inner part.

Feed PROFIBUS PA cable via the enclosure.

1. Remove the 4 screws of the housing cover using a crosstip screwdriver.
2. Thread the PA cable for the equipotential bonding line through the cable gland X1.
3. Thread the PA cable for the two DP/PA couplers through the cable glands PA1 and PA2.
4. Tighten the cable glands on the enclosure. Torque 6.25 Nm.

Notice

Impairment to the degree of protection

The degree of protection can be impaired if you over-tighten the cable glands.

Sealing unused cable glands

Seal unused cable glands with a plug for cable glands This is the only way to ensure degree of protection IP66.

Center feed: Equipotential bonding line loop through

If you loop the equipotential bonding line on the active field splitter (AFS) over the X2 cable bushing, then set the PA bus terminator switch to OFF on both DP/PA couplers.

See also

Active field distributor (AFS) (Page 2-11)

5.2.3.3 Connecting the wring to the terminal block.

Introduction

Connect the wiring of the PROFIBUS PA cable to the terminal block in the active field distributor via the cage-clamp method.

Tools required

- Screwdriver with 3 mm blade

Fixing the wiring on the cage-clamp contact

Caution

The cage-clamp will be destroyed if handled incorrectly

The cage-clamp will be destroyed if you insert the screwdriver into the opening for the wiring.

Only insert the screwdriver in the **rectangular openings** of the terminal block.

1. With a screwdriver press the cage-clamp in the rectangular opening down, and keep it depressed. Ensure that the wires have the correct polarity.
2. Insert the wiring into the round opening of the appropriate cage-clamp until the stop.
3. Remove the screwdriver from the cage-clamp. The wiring is held in place by the cage-clamp contact.

5.2.3.4 Pin assignment for active field splitter (AFS)

Connection rules

Note

Shield connection

If you use the cable glands of the active field distributor then the shield connection via the terminal S is not required.

Caution

Failure of the equipotential bonding line

Inadvertent insertion of the PA+/PA- wiring in the terminal S can result in the failure of all PA nodes.

Pin assignment for active field splitter (AFS)

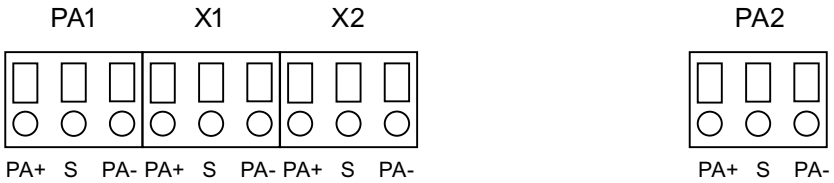

Table 5-2 Pin assignment for active field splitter (AFS)

Connection		Terminal	Assignment
PA1, PA2	PA main line to the DP/PA couplers	PA+	Data cable (red)
		S	Shield (not required)
		PA-	Data cable (green)
X1	Spur line to the PA field device (feed)	PA+	Data cable (red)
		S	(not required)
		PA-	Data cable (green)
X2	Spur line to the PA field devices (for center feed)	PA+	Data cable (red)
		S	(not required)
		PA-	Data cable (green)

Connecting the active field distributor

1. Place the enclosure lid on the lower part of the enclosure.
2. Tighten the 4 cable glands on the enclosure. Torque 2.0 Nm.

See also

Earthing the field distributor (Page 5-3)

5.3 Connecting the DP/PA link

5.3.1 Wiring the DP/PA link for non-redundant mode

Connections of the DP/PA link

The figure below shows all the connections you must create from and to the DP/PA coupler for non-redundant mode:

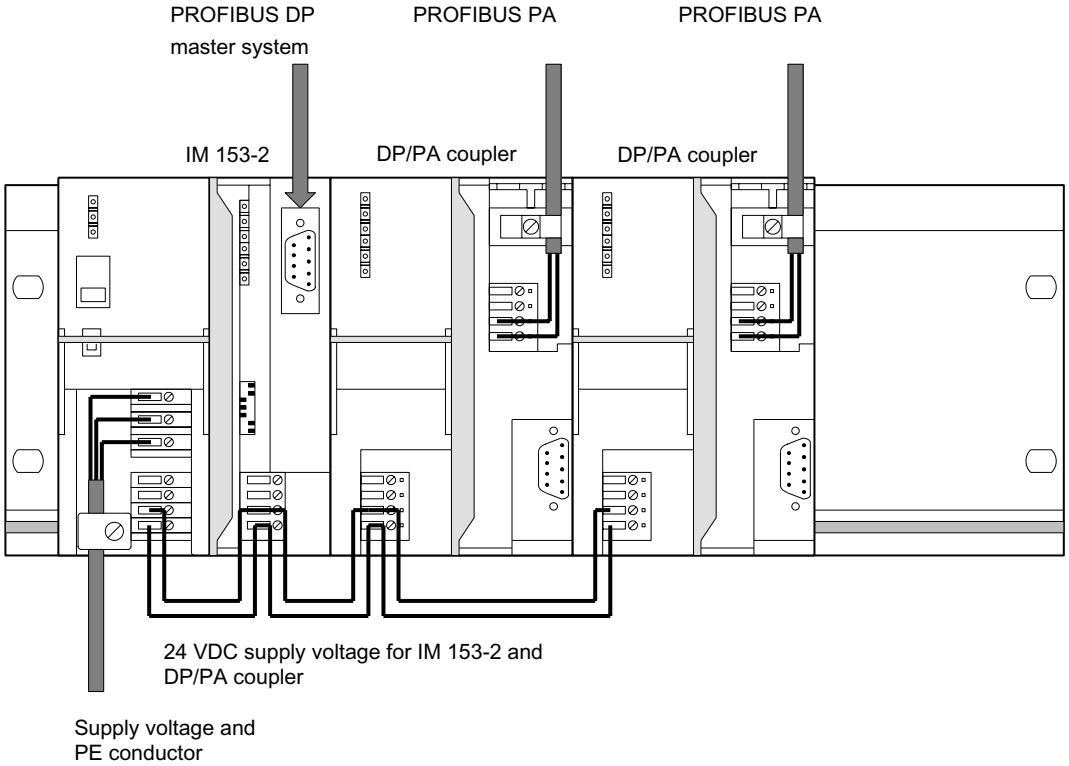

Figure 5-7 DP/PA link connections for non-redundant operation

Voltage supply

In the DP/PA link voltage supplies are required for the IM 153-2 and for each DP/PA coupler.

5.3.2 Wiring the DP/PA link for redundant operation

Connections of the DP/PA link

The figure below shows all the connections you must create from and to the DP/PA link for the redundant mode:

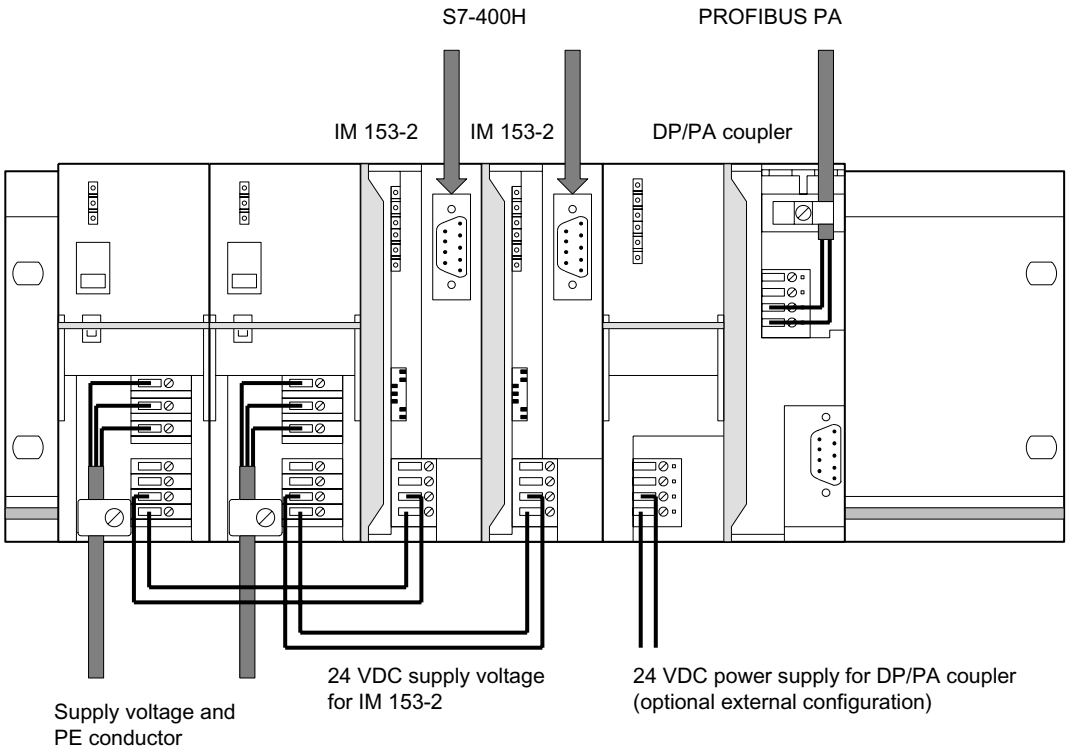

Figure 5-8 Connections of the DP/PA link for redundant mode

Voltage supply

In the DP/PA link voltage supplies are required for the both IM 153-2 and for each DP/PA coupler.

PROFIBUS DP

PROFIBUS DP connections to the S7-400H are required on both IM 153-2 in the DP/PA link.

5.4 Connecting Y link

Y link connections

The figure below shows all the connections you must create from and to the Y link:

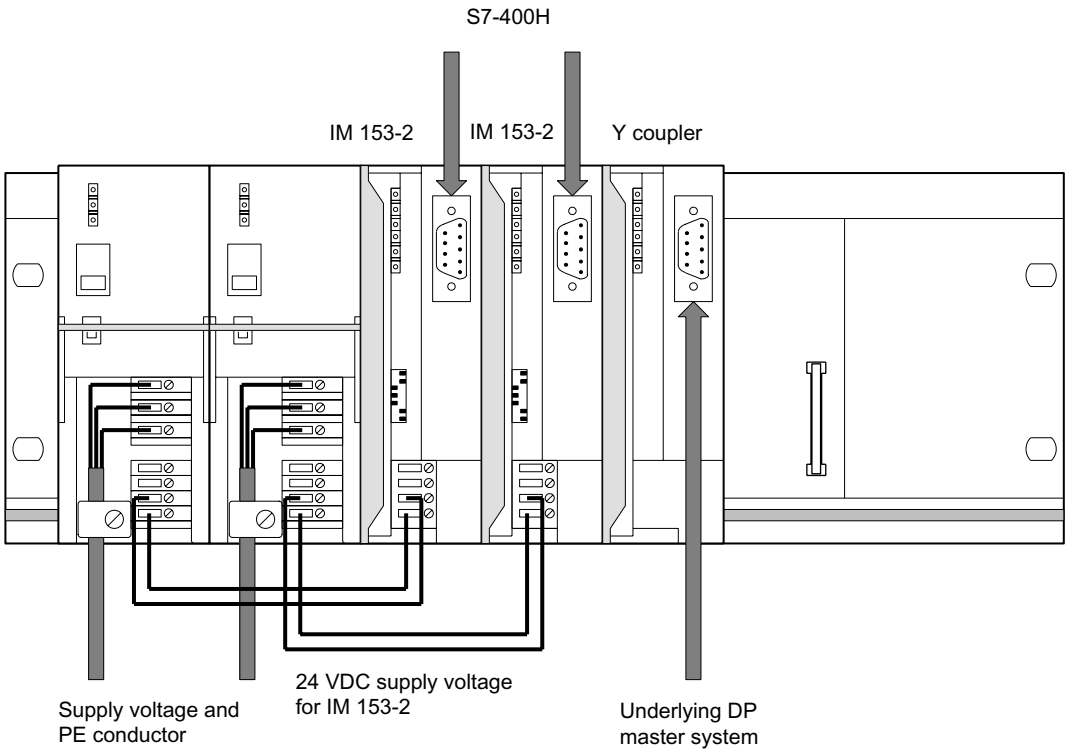

Figure 5-9 Y link connections

Voltage supply

In the Y link voltage supplies are required for the two IM 153-2.

PROFIBUS DP

The following PROFBUS DP connections are required in the Y link:

- To the S7-400H on both IM 153-2
- To the underlying DP master system on the Y coupler

Bus terminal resistors

The Y coupler possesses no integrated bus terminal resistors. If the Y coupler is arranged at the beginning or end of a bus segment, you must also connect in the bus terminal resistors on the bus connector.

5.5 Connecting the Voltage Supply

Introduction

For all modules described the voltage supply is connected in the same way.

Required Tools

To connect the voltage supply you require a 3 mm screwdriver.

Power supply unit

You must only use SELV-type power supply units with protective extra-low voltage with safe electrical isolation (≤ DC 60 V).

The size of the power supply unit depends on the power consumption of the connected components.

Connection for voltage supply

The 4-pin screw-type terminal for the 24 V voltage supply is located behind the front door at the bottom on the IM 153-2. The connections have the following functions:

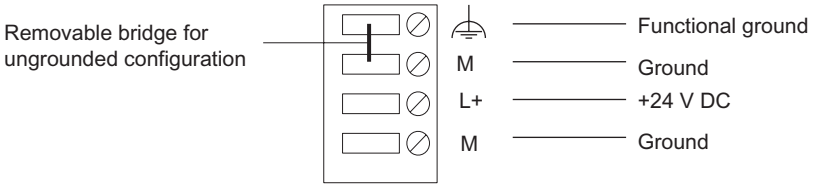

Figure 5-10 Voltage supply for the IM 153-2

The maximum cross-section of the connection is 2.5 mm². There is no mains lead cleat.

See also

Wiring the DP/PA coupler for stand-alone mode (Page 5-6)

Wiring the DP/PA link for non-redundant mode (Page 5-17)

Wiring the DP/PA link for redundant operation (Page 5-18)

Connecting Y link (Page 5-19)

DP/PA coupler FDC 157-0 in redundancy mode

To ensure availability in redundancy mode we recommend using an separate power supply module for each DP/PA coupler.

5.6 Connecting PROFIBUS DP

Introduction

PROFIBUS DP is connected in the same way for all the modules described.

Required Tools

You require a 3 mm screwdriver to fix the bus connector to the IM 153-2.

Bus cable and connector

Use only the specified accessories for PROFIBUS DP.

Procedure

Connect the PROFIBUS DP as follows:

1. Plug the bus connector into the PROFIBUS socket.
2. Tighten the fixing screws of the bus connector.

Additional information

All the information required for handling bus cables and connectors is to be found in the *ET 200 Distributed I/O System* manual.

You will find the manual on the Internet at:

http://support.automation.siemens.com

Search for the entry with the number 1142470.

5.7 Connecting PROFIBUS PA on the DP/PA coupler

Important instructions:

The following content is binding for the PROFIBUS°PA installation:

- Investigation of intrinsic safety for field bus systems; PTB Report W-53, Braunschweig, March 1993 (only applicable for installation in a hazardous area).
- *PROFIBUS PA Commissioning Guide,*
  Notes on Using the IEC 61158-2 Technology for PROFIBUS,
  (German art. no. 2.091, English art. no. 2.092)
  PROFIBUS International,
  Haid-und-Neu-Straße 7, D-76131 Karlsruhe

  You will find additional information on the Internet at:

  http://www.profibus.com
- Installation regulations in accordance with IEC 60079-14 (Electrical installations in hazardous areas)

Tools required

To connect the PROFIBUS PA you require a screwdriver with a 3 mm-wide blade.

To prepare the cable/wiring we recommend the tool PROFIBUS FastConnect.

Bus cable

Use the specified bus cable for PROFIBUS PA.

PROFIBUS PA connection

The 4-pin screw-type terminal for the PROFIBUS°PA connection is positioned under the right-hand front door at the top on the DP/PA coupler. The connections have the following functions:

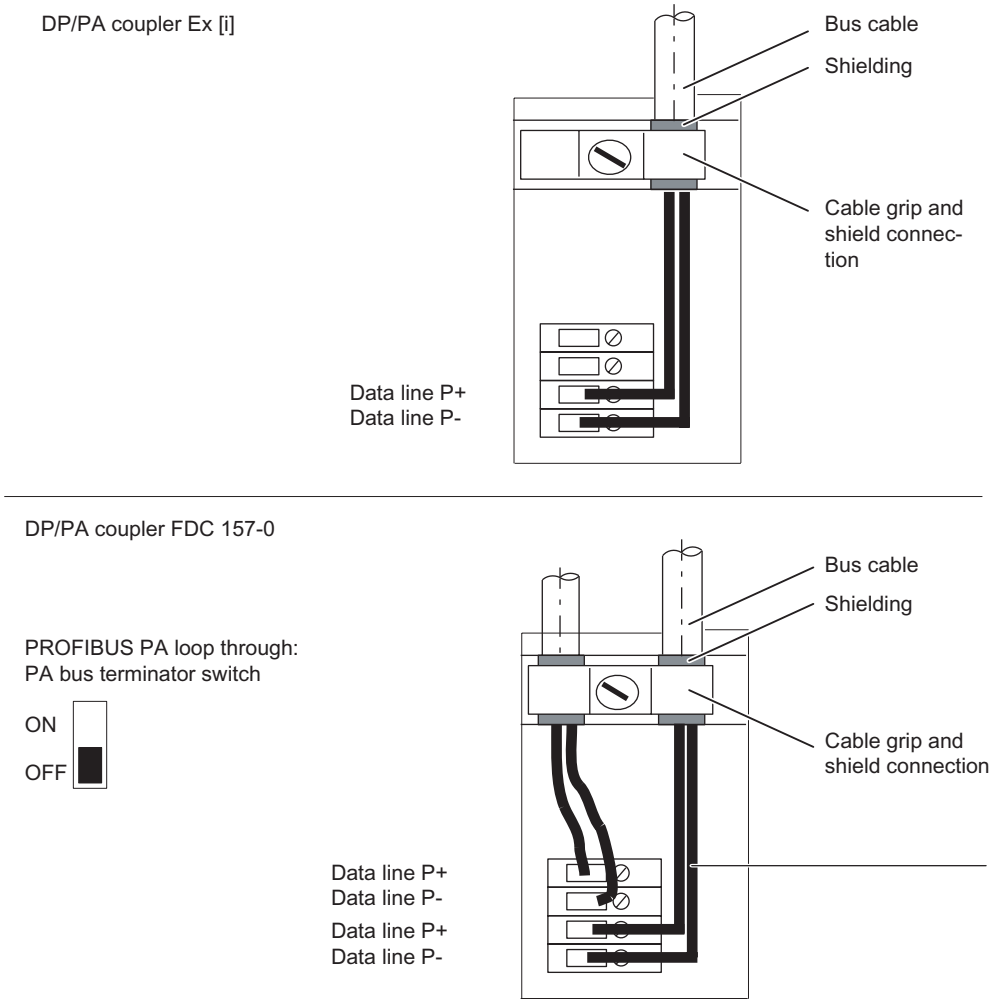

Figure 5-11 PROFIBUS PA connection

PA bus terminator switch

You can loop through the PROFIBUS PA on DP/PA couplers with a PA bus terminator switch. The PA bus terminator switch is available on the following DP/PA couplers:

- DP/PA coupler FDC 157-0 (6ES7157-0AC83-0XA0)
- DP/PA coupler (6ES7157-0AC82-0XA0)

In the DP/PA coupler Ex [i] the bus terminator cannot be switched off. Consequently the DP/PA coupler Ex [i] must be located at the beginning or the end of a PA segment.

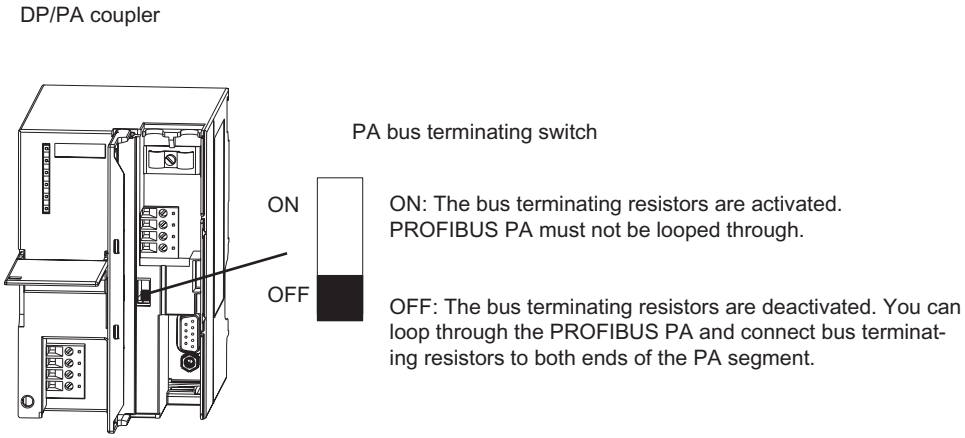

Figure 5-12 PA bus terminator switch

Procedure

Connect the PROFIBUS PA as follows:

1. Strip the insulation from the bus cable as depicted and pull the braided shield over the insulation.

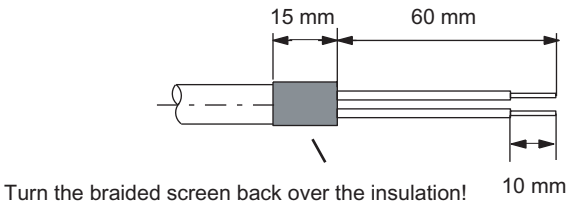

2. Clamp the shield of the bus cable under the cable grip and screw down the cable grip.
3. Fix the wires of the bus lead into the screw-type terminals P+ and P-. Ensure that the wires have the correct polarity.

Commissioning: DP/PA coupler

6

6.1 Commissioning the DP/PA coupler for stand-alone mode

Requirement

When you have fully installed and wired the DP/PA coupler and switched on the voltage supply, the DP/PA coupler is ready to operate.

Setting transmission speed

The transmission speed must be set at 45.45 kBaud for the DP master.

6.2 Commissioning the DP/PA coupler FDC 157-0

Requirements

Before you commission the DP/PA coupler FDC 157-0 the following prerequisites must be satisfied:

- You must have completely installed and wired the DP/PA couplers.
- You have completely installed the PROFIBUS DP. PROFIBUS DP is ready to operate.
- You have fully installed the PROFIBUS PA. PROFIBUS PA is ready to operate.

Configuring the DP/PA coupler FDC 157-0:

DP/PA coupler FDC 157-0 configuration as DP slave is required in the following

cases:

- If the diagnostic functions will be effective.
- If the DP/PA couplers will be operated with ring redundancy or coupler
- redundancy.

Note

If you use the DP/PA coupler FDC 157-0 in redundancy mode (ring redundancy or coupler redundancy), then configure a user-defined profile with a retry limit of 3 in the network settings / profile for the properties of the PA master system in the network settings / profile.

Commissioning the DP/PA coupler FDC 157-0

Basic procedure:

1. Configuring the DP/PA coupler.
2. Set the PROFIBUS addresses in the DP/PA couplers.
3. Select the redundancy mode on the DP/PA couplers.
4. Switch on the power supply for the DP/PA couplers.
5. Load the configuration in the target system.

Applications DP/PA coupler FDC 157-0

The following table shows the applications and the available functions for the DP/PA coupler and the settings that are required For ring redundancy and coupler redundancy the settings are required on the DP/PA coupler pair.

Table 6-1 Applications DP/PA coupler FDC 157-0 and required settings

Applications - DP/PA coupler FDC 157-0 (standalone or in the DP/PA link)	Functions	Settings on the DP/PA coupler/on the DP/PA coupler pair	Settings in the configuration
• Non-redundant operation of DP/PA coupler [1] • Redundant operation of a DP/PA coupler pair	Diagnostic function deactivated [2]	PROFIBUS address = 0	PROFIBUS address = 0
	Diagnostic function activated	PROFIBUS address> 0 (1 to 125)	PROFIBUS address> 0 (1 to 125)
Redundant operation of a DP/PA coupler pair	Ring redundancy activated	ON 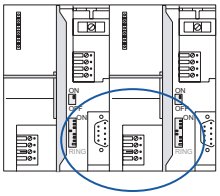	Redundancy mode Ring redundancy
	Coupler redundancy activated	OFF 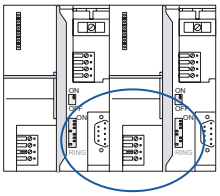	Redundancy mode Coupler redundancy

1 Also as replacement for the DP/PA coupler with order number 6E7157-0AC82-0XA0
2 DP/PA couplers transparent in the DP/PA link.

6.3 Configuration with a GSD file

Introduction

With the GSD file you can configure the DP/PA coupler FDC 157-0 with STEP7, COM PROFIBUS or via a different software program. For this you must install the GSD file via an appropriate import function of the configuration software.

Requirements

- STEP 7 from V 5.3 SP3
- GSD file SI028131.GSG. This can be download from the Internet at:

  http://support.automation.siemens.com

Installing the GSD file in STEP 7

1. Start STEP 7 and select the menu command **Extras > Install new GSD file** in the HW Config.
2. In the next dialog box, select the GSD file to install, and confirm with "OK."

   Result: The DP/PA coupler will be displayed in the hardware catalog in the directory "PROFIBUS PA / DP/PA link" and can be configured.

Configure the DP/PA coupler with COM PROFIBUS or other configuration software

1. Copy the GSD file of the DP/PA coupler into the COM PROFIBUS directory ...COMPB5 \ GSD (preset). Copy the bitmap file into the directory ...COMPB5 \ BITMAPS.
2. Start COM PROFIBUS, then select the menu item **File > Read GSD file**.

   Result: The DP/PA coupler will be displayed in the hardware catalog for the slave configuration.
3. Configure the DP/PA coupler with COM PROFIBUS or other configuration software
4. Assign the parameters for the DP/PA coupler with COM PROFIBUS or other configuration software.
5. Save the configuration or load the configuration in the DP master.

Note

For installation instructions when using other configuration software, refer to the corresponding documentation.

6.4 Configuring with STEP 7

Introduction

It is possible to configure a DP/PA coupler with STEP 7 via the HW update.

Prerequisite

- STEP 7 from V 5.3 SP3
- HSP0095

Installing the HW update in STEP 7

1. Start STEP 7 and select the menu item **Extras > Install new GSD file** in the HW Config.
2. In the next dialog box, select the HW update file to install, and confirm with "OK."

   Result: The DP/PA coupler FDC 157-0 will be displayed in the hardware catalog in the directory "PROFIBUS PA / DP/PA-Link" and can be configured with *STEP 7*

Configuring DP/PA couplers with STEP 7

1. Start *STEP 7* and open your SIMATIC station in the HW Config.
2. Drag a DP/PA coupler FDC 157-0 out of the hardware catalog from the directory "PROFIBUS DP / DP/PA link" to a DP master system (for S7 standard mode).

   Result: The properties dialog for the PROFIBUS interface of the DP/PA coupler will be displayed.
3. Change the suggested address of the DP/PA coupler if necessary.
4. Assign parameters to the DP/PA coupler and confirm with OK.
5. If the DP/PA coupler is used redundantly then configure the partner DP/PA coupler. To do this repeat steps 2 to 4.
6. Save the configuration or load the configuration in the DP master.

Note

PROFIBUS address

Set the PROFIBUS addresses in the DP/PA couplers via the DIL switches.

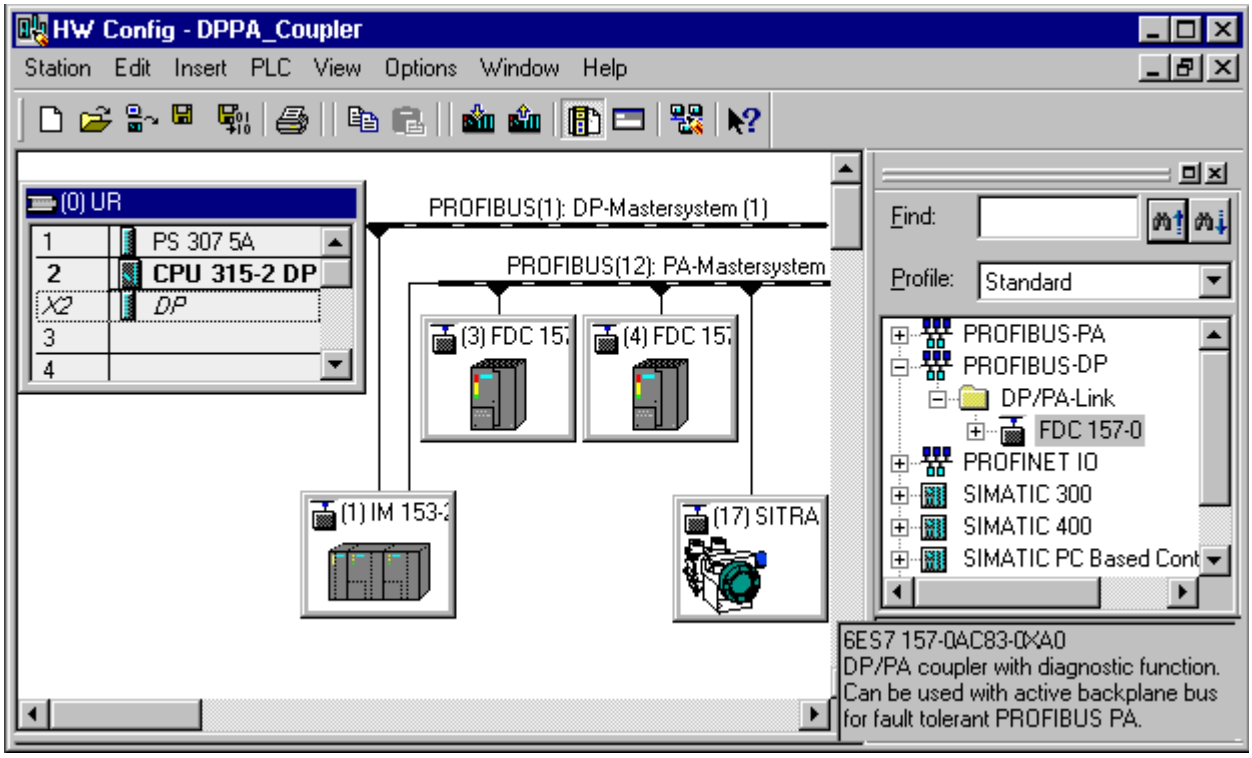

Figure 6-1 Integrating DP/PA couplers in HW Config

Configuring PA field devices

If you use multiple DP/PA couplers FDC 157-0 in one link then a topological assignment is not possible in HW Config. However you can review the assignment online via the local LifeList.

Further information

Additional information on configuring the PA field devices is available in the manual *PDM V 6.0 The Process Device Manager*.

http://support.automation.siemens.com/WW/view/de/21407212

See also

Configuring the PROFIBUS PA master system (Page 7-4)

6.5 DP/PA coupler FDC 157-0 in the redundant DP/PA link

Introduction

In addition to the ring redundancy and coupler redundancy functions on the PA side, the DP/PA-coupler FDC 157-0 also supports redundancy on the PROFIBUS DP side. For this it is necessary to configure a redundant DP master system of an S7-400H with a redundant DP/PA link IM 153-2.

Settings in HW Config

Note

Only the following configuration ensures that the DP/PA coupler FDC 157-0 can change to the other side of the DP/PA link without bumps if there is a switchover on the overlaid PROFIBUS DP chain.

If the DP/PA coupler FDC 157-0 will work as DP slave with diagnostic function then the following settings are required in the HW Config:

- In the object properties of the DP interface of the H-CPU, select the mode **DP master** and the DP mode **DPV1**.
- In the object properties of the DP/PA coupler, in the station parameters, select the DP alarm mode **DPV1**.

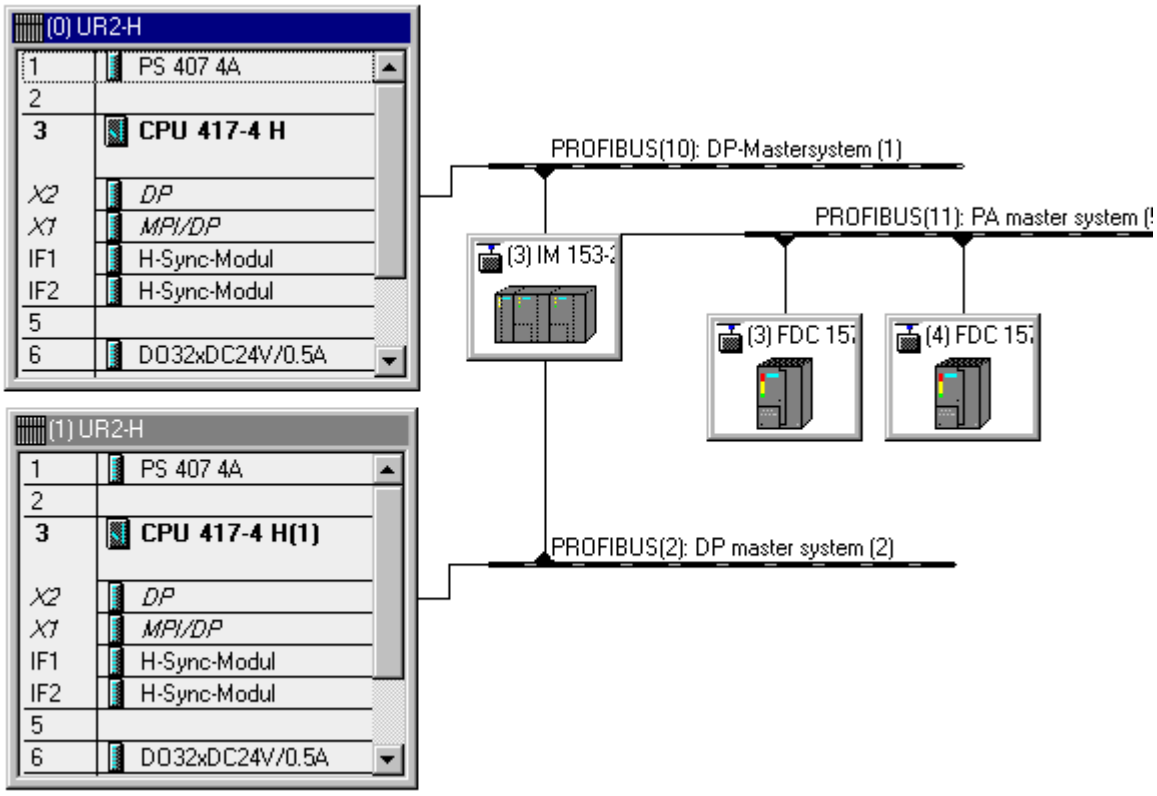

Figure 6-2 HW Config: Configuration of an S7-400H with DP/PA link and DP/PA couplers FDC 157-0

See also

Configuring DP/PA link (Page 7-2)

6.6 Parameters for diagnostic selection of the DP/PA coupler FDC 157-0

Device-specific parameters

Parameter	Value range	Default setting	Efficiency range
Module status	• disable • enable	enable	Module
Status LifeList	• disable • enable	disable	Module
Channel-specific diagnostics	• disable • enable	enable	Module
Coupler diagnostics	• disable • enable	enable	Module
Signal level monitoring	• disable • enable	disable	Module

See also

Structure of the current value and voltage value (Page 11-14)

6.7 Setting the PROFIBUS address and redundancy mode

Introduction

Activate diagnostic functions of the DP/PA coupler FDC 157-0 by means of the PROFIBUS address. The DP/PA coupler is transparent in the DP/PA link with PROFIBUS address 0.

Activate the redundancy mode, ring redundancy or coupler redundancy on the DP/PA coupler pair and in the configuration.

Rules

- Valid PROFIBUS addresses are 1 to 125.
- Each PROFIBUS address may only be assigned once in the DP master system.
- The PROFIBUS addresses of both DP/PA couplers must be different.
- The PROFIBUS addresses set on the DP/PA coupler and in the configuration software must match.
- The redundancy mode set on the DP/PA coupler pair and in the configuration software must match.
- DP/PA coupler in the DP/PA link:
  The configured and set PROFIBUS addresses of the IM 153-2 must match.

Tools required

- Screwdriver with 3 mm blade

Setting the PROFIBUS address and redundancy mode

1. Open the front door of the DP/PA coupler.
2. Set the PROFIBUS address at the DIL switches.
3. Set the redundancy mode at the DIL switches.
4. For center feed: If you loop the equipotential bonding line on the active field splitter (AFS) over the X2 cable bushing, then set the PA bus terminator switch to OFF on both DP/PA couplers.
5. Close the front door of the DP/PA coupler.

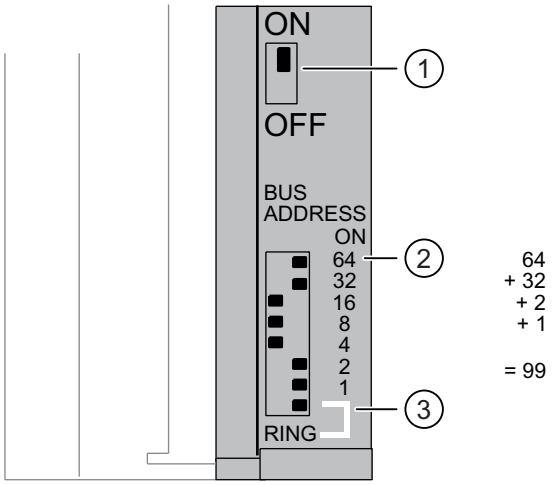

① PA bus terminal switch
ON: Bus terminating resistor switched on (default setting).
OFF: Bus terminating resistor switched off.

② Set the PROFIBUS address.

③ Redundancy mode
ON: Ring redundancy.
OFF: Coupler redundancy (default setting).

Changing the PROFIBUS address

You can change the PROFIBUS address that has been set at any time. However, the DP/PA coupler does not apply the new setting until the 24 VDC supply has been switched off / on.

Commissioning: DP/PA link

7

Overview of Contents

In this chapter you will learn which steps you must perform to commission the DP/PA link. These steps are explained in detail in the individual sub-sections.

7.1 Commissioning DP/PA link

Requirements

The following requirements must be met before you commission the DP/PA link:

- You have fully installed and wired the DP/PA link.
- You have fully installed PROFIBUS DP. PROFIBUS DP is ready to operate.
- You have fully installed PROFIBUS PA. PROFIBUS PA is ready to operate.

Commissioning DP/PA link

1. Configure the DP/PA link.
2. Set the PROFIBUS address of the IM 153-2.
3. Switch on the voltage supply for the DP/PA link.
4. Download the configuration to the PLC.

Configuring the DP/PA link

- The DP/PA link is configured for the S7 standard and redundant modes using *STEP 7*.
- For DP standard master mode, the DP/PA link is configured via DDBF file, for example using *COM PROFIBUS*.

The DP/PA couplers are transitions between the S7 backplane bus of the IM 153-2 and PROFIBUS PA with the PA field devices. Hence it is not necessary to configure the DP/PA coupler.

See also

Setting the PROFIBUS address of the IM 153-2 (Page 4-13)

7.2 Configuring for S7 standard or redundant mode

Overview of Contents

The DP/PA link is configured for the S7 standard and redundant modes with *STEP 7*.

7.2.1 Configuring DP/PA link

Configuring DP/PA link

1. Start *STEP 7* and in HW Config open your SIMATIC or SIMATIC H station (for redundant mode).
2. Drag an IIM 153-2 (6ES7153-2Bxx1-0XB0) out of the PROFIBUS DP\DP/PA link folder in the hardware catalog to a DP master system (for S7 standard mode) or to the redundant DP master system of an S7-400H (for the redundant mode).

   Result: The Properties dialog for the PROFIBUS interface of the IM 153-2 is displayed.
3. If necessary, change the proposed address of the IM 153-2 in the higher level DP master system.

   Result: After closing this dialog a dialog is displayed in which you can select the underlying master system.
4. Select PROFIBUS PA and confirm with OK.

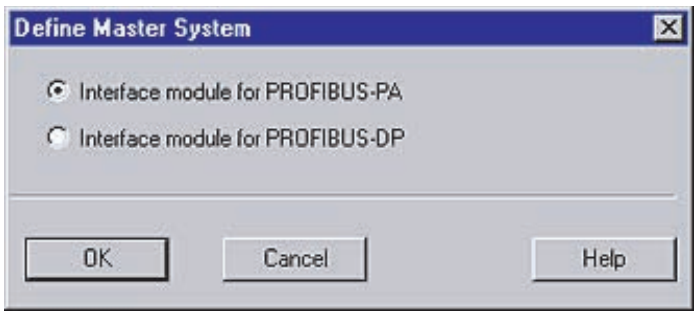

Figure 7-1 Dialog for selecting the underlying master system (PROFIBUS PA)

Result: The DP/PA link is inserted into the higher level DP master system together with the underlying PA master system.

DPV0 or DPV1 slave

It is only possible to operate the IM 153-2 as a DPV1 slave in conjunction with a DPV1 master. Only then can the additional functions (acyclical services) of a DPV1 slave be used.

In *STEP 7*, HW Config, the mode for the DP master being used can be selected in the Object Properties, if required: "S7-compatible" or "DPV1")

Switchover time in the redundant mode

Warning
Injury to persons may result.
With *STEP 7* V5.2 modified bus parameters can lead to longer switchover times in the H system when the IM 153-2 is used as a redundant DP slave.

Example for the configuration of a DP/PA link for the redundant mode

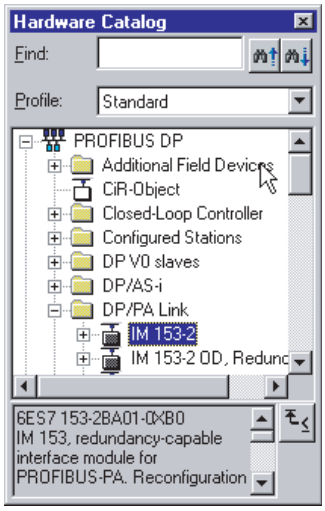

Figure 7-2 HW Config DP/PA link in the hardware catalog

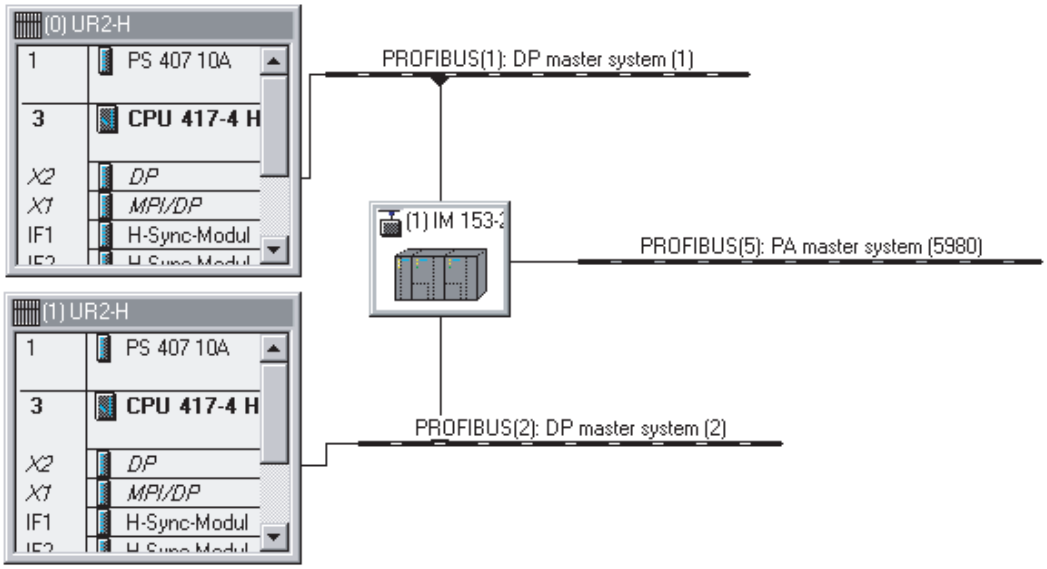

Figure 7-3 HW Config Minimum configuration of an S7-400H with DP/PA link

See also

DP/PA coupler FDC 157-0 in the redundant DP/PA link (Page 6-6)

7.2.2 Configuring the PROFIBUS PA master system

Introduction

The PA field devices can be integrated in *SIMATIC PDM* or in *STEP 7* as standard slaves via their DDBF files.

Configuring with *STEP 7*

1. If you have not done so so far, start *STEP 7* and in HW Config open your SIMATIC or SIMATIC H station (for redundant mode).
2. If the desired PA field devices are not displayed in the **PROFIBUS PA** file in the hardware catalog:

   Import the GSD files of the PA field devices using the **Options > Install new GSD** menu command.
3. Drag the desired PA field devices from the hardware catalog to the PA master system that is displayed behind the IM 153-2.

Result

During configuration of the PA field devices HW Config checks that the quantity structure is adhered to and displays a relevant error message if it is exceeded.

PROFIBUS address of the IM 153-2 in the PA master system

- In S7 standard mode the IM 153-2 uses the address 2.
- In redundant mode the two IM 153-2 use the addresses 1 and 2. In addition, the address 125 is blocked for PA field devices.

The first possible address for a PA field devices is 3 in both cases.

Editing the PA field devices in the user program

The process data of the PA field devices should only be accessed via the process images in the user program.

7.3 Configuring for DP standard master mode

7.3.1 GSD files

For DP standard master mode, the DP/PA link and the PA field devices are configured via GSD files, for example with *COM PROFIBUS*.

Template files

Template files have been created for the DP/PA link that can be used to generate the finished GSD file:

- pa_link_2bax1.dat für IM 153-2 (6ES7153-2BA01-0XB0 and 6ES7153-2BA81-0XB0)

These template do not yet contain any module ID for PA field devices.

Module IDs must be entered into the respective GSD file for each PA field device you wish to use in the DP/PA link. There is a software tool available for this purpose ("GSD Tool for IM 157 / IM 153-2")

GSD file off the Internet

You can download the template files and the GSD tool free of charge at:

http://support.automation.siemens.com

Search for the entry with the number 15294662.

The GSD files for the PA field devices supplied by Siemens AG are also to be found at this Internet address. Search for the entry with the number 1581624.

Creating a GSD file

Download the relevant template file and the GSD Tool from the aforementioned Internet address and follow the accompanying instructions.

Note

Disclaimer

Siemens AG assumes no liability for damage arising from using the GSD Tool; in particular not for personal, material or financial damage that constitutes consequential damage directly or indirectly connected to the use of the GSD Tool.

We offer no support for the application of the GSD Tool.

The GSD Tool creates a GSD file for the DP/PA link from the template file and the GSD files of the PA field devices to be used that you have added:

- sip58052.gsd for IM 153-2

7.3.2 Configuring DP/PA link

Procedure

Configure the DP/PA link using your configuration tool (for example *COM PROFIBUS*) like any other DP slave on PROFIBUS DP.

For this purpose download the complete GSD file for the DP/PA link to your configuration tool.

Notice

When configuring with GSD file

If a DP/PA link with IM 153-2BA01 is configured using GSD file it will not start because the "MFLB" user parameter is set to 6ES7153-2BA81-0XB0 by default.

When an IM 153-2BA01 is used you must reset the "MFLB" user parameter to 6ES7153-2BA01-0XB0.

Parameter assignment and configuration frame

The frame length for parameter assignment depends on the number of PA field devices in use and may amount to a maximum of 223 bytes.

The frame length for parameter assignment depends on the number of PA field devices in use and may amount to a maximum of 244 bytes.

You can find the description of the parameter assignment and configuration frame on the Internet at:

http://support.automation.siemens.com

Search for the entry with the number 13406349.

Restrictions

Functions that are based on reading the configuration prior to initially assigning the parameters for the DP/PA link, are not supported. For this reason for example the CP 5431 cannot be used as DP master. It is equally not possible to control variables with *COM PROFIBUS* until the DP/PA link parameters have been assigned.

7.3.3 How to configure PROFIBUS PA field devices

Requirement

The product designations for the required PA field devices must have been entered in the GSD file of the IM 153-2.

Notice

For redundant operation only those PA field devices may be configured that have the entries "Begin of Device" or "Begin of Device h supported" in their GSD file.

Configuration principle

To configure the DP/PA link select the manufacturer's specifications for the PA field devices in your configuration tool (Product and, where applicable module designation). The specifications for the PA field devices must be entered in ascending order corresponding to their addresses.

An example of a configuration is shown in the figure below.

Procedure

1. In your configuration tool move to the DP slave configuration.
2. Enter the manufacturer designation (for example SIEMENS SITRANS P) for the first PA field device in the "Order number" or "Module" field and apply this in the first slot. Set the PROFIBUS address for the PA field device.

   Repeat this procedure for all PA field devices in use.
3. Terminate the entries and complete the configuration. The further procedure (for example saving, compiling, ...) is identical to other DP slaves.

PROFIBUS address of the IM 153-2 in the PA master system

In the PA master system the IM 153-2 uses the address 2. The first possible address for PA field devices is 3.

Deployable transducers

Transducers may be used that accept a 10-byte parameter assignment frame.

Configuring with *COM PROFIBUS*

For SIMATIC S5 PA field devices are integrated via their GSD files as standard slaves in *COM PROFIBUS* (V3.1 and later).

1. Copy the GSD file of the IM 153-2 into the *COM PROFIBUS* directory: **...COMPBxx\GSD**.
2. Start *COM PROFIBUS* and select the **File > Read in GSD file** menu command.

   Result: The IM 153-2 is displayed in the hardware catalog during slave configuration.
3. Configure the PA field devices with *COM PROFIBUS*

Example: View of configuration in *COM PROFIBUS*

The figure below shows an example of the view of a configuration for the DP/PA link using *COM PROFIBUS*.

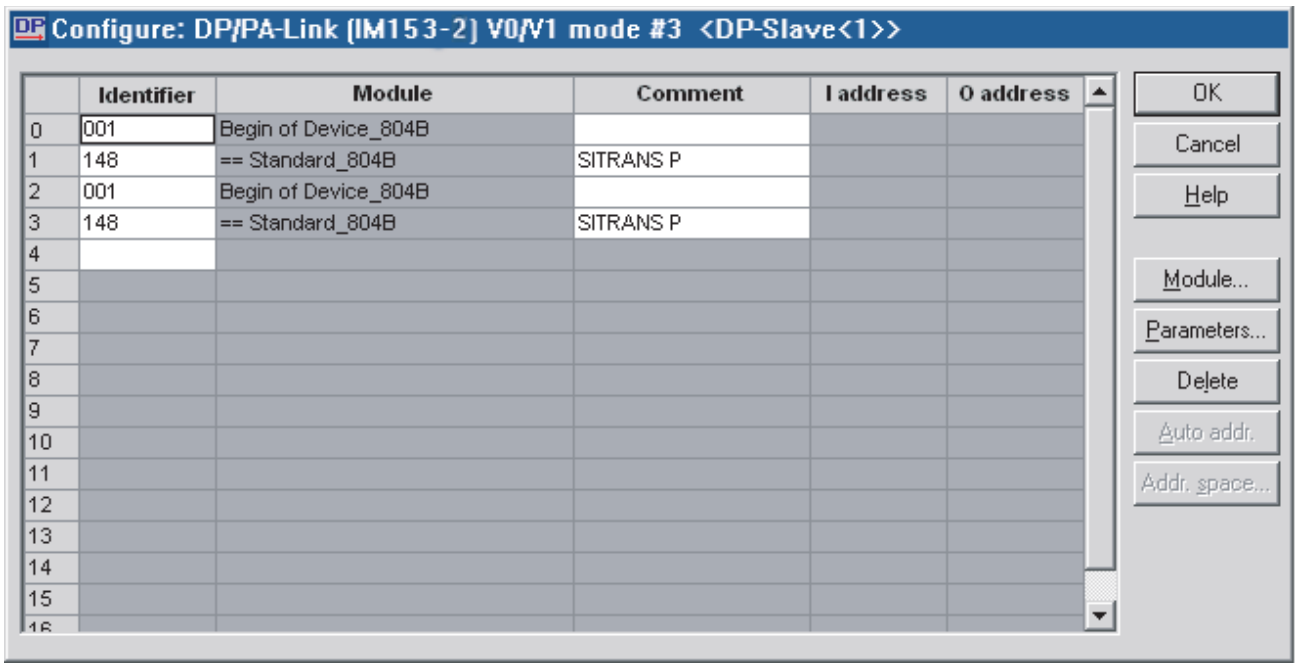

Figure 7-4 Example of a configuration with *COM PROFIBUS*

How to enter a PROFIBUS address

1. In the "Module" column select the "Begin of Device" of the relevant PA field device and select the "Parameter..." button.
2. In the "Values" column enter the desired PROFIBUS address and confirm with "OK".

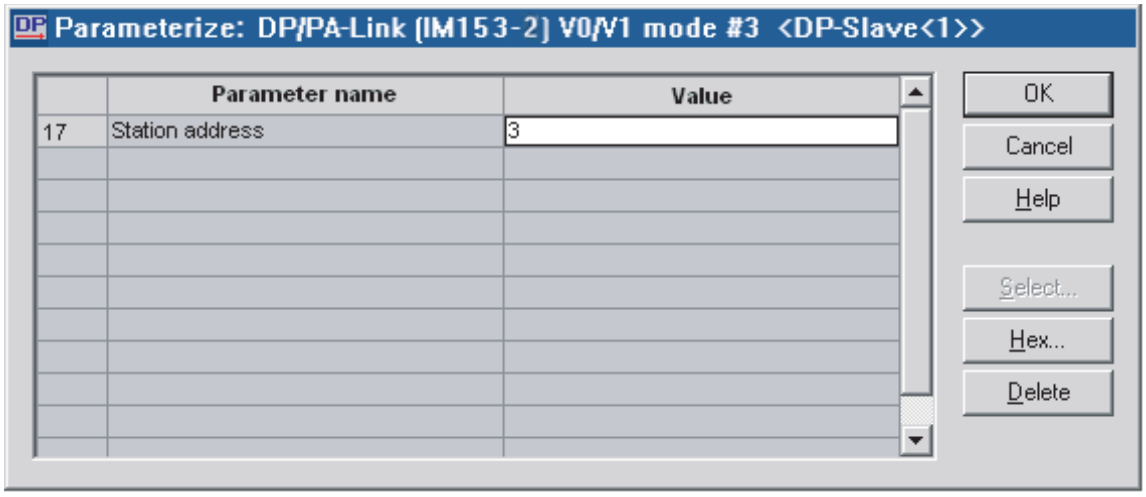

Figure 7-5 Entering the PROFIBUS address

Commissioning: Y link

8

Overview of Contents

In this chapter you will learn which steps you must perform to commission the Y link. These steps are explained in detail in the individual sub-sections.

8.1 Commissioning Y link

Requirements

The following requirements must be met before you commission the Y link:

- You have fully installed and wired the Y link.
- You have fully installed the H system and the redundant DP master system. PROFIBUS DP is ready to operate.
- You have fully installed the underlying DP master system and connected it to the Y coupler. PROFIBUS DP is ready to operate.

Commissioning Y link

1. Configure the Y link.
2. Configure the underlying DP slaves
3. Switch on the voltage supply for the Y link.
4. Set the PROFIBUS address of the IM 153-2.
5. Download the configuration to the PLC.

Configuring the Y link

- The Y link is configure using *STEP 7* for the redundant mode.
- For DP standard master mode, the Y link is configured via GSD file, for example with *COM PROFIBUS*.

The Y coupler is a transition between the S7 backplane bus of the IM 153-2 and the underlying PROFIBUS DP with the DP slaves. Hence it is not necessary to configure the Y coupler.

See also

Setting the PROFIBUS address of the IM 153-2 (Page 4-13)

8.2 Configuring for the redundant mode

Overview of Contents

The Y link is configure using *STEP 7* for the redundant mode.

8.2.1 How to configure Y link

Configuring Y link

The Y link is configure in *STEP 7*.

1. Start *STEP 7* and in HW Config open your SIMATIC H station.
2. Drag an IM 153-2 (6ES7153-2Bxx1-0XB0) out of the PROFIBUS-DP\DP/PA directory from the hardware catalog to the redundant DP master system of an S7-400H.

   Result: The Properties dialog for the PROFIBUS interface of the IM 153-2 is displayed.
3. If necessary, change the proposed address of the IM 153-2 in the higher level DP master system.

   Result: After closing this dialog a dialog is displayed in which you can select the underlying master system.
4. Select PROFIBUS DP and confirm with OK.

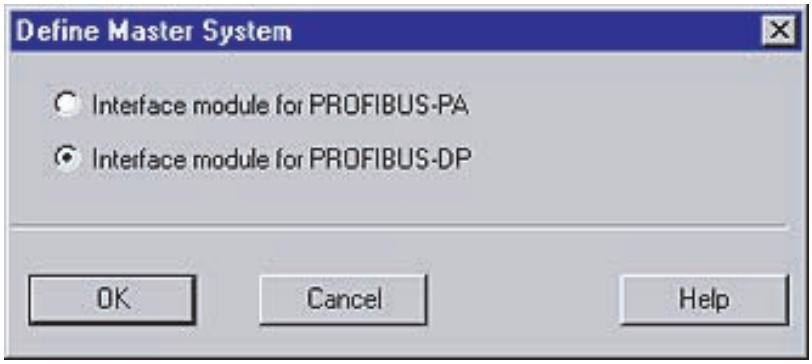

Figure 8-1 Dialog for selecting the underlying master system (PROFIBUS DP)

   Result: The Y link is inserted into the redundant DP system. The default transmission speed of the underlying DP master system is 1.5 Mbaud.
5. If you want to change the transmission speed of the underlying DP master system, double-click on it.
   Result: The dialog with the properties for the underlying master system is displayed.
   – Select the "Properties..." button.

     Result: The "Properties PROFIBUS" dialog is displayed.
   – In the "Network settings" tab select a transmission rate ranging from 45.45 kBaud to 12 MBaud and confirm with OK.

DPV0 or DPV1 slave

It is only possible to operate the IM 153-2 as a DPV1 slave in conjunction with a DPV1 master. Only then can the additional functions (acyclical services) of a DPV1 slave be used.

Switchover time in the redundant mode

Warning

Injury to persons may result.

With *STEP 7* V5.2 modified bus parameters can lead to longer switchover times in the H system when the IM 153-2 is used as a redundant DP slave.

Example of how to configure a Y link

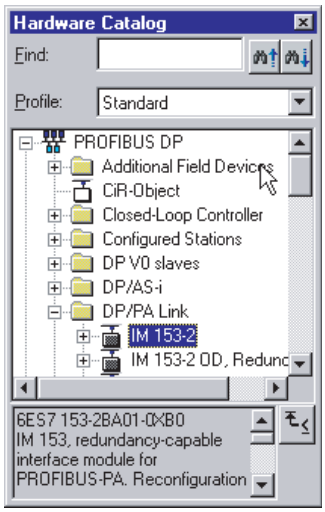

Figure 8-2 HW Config Y link in the hardware catalog

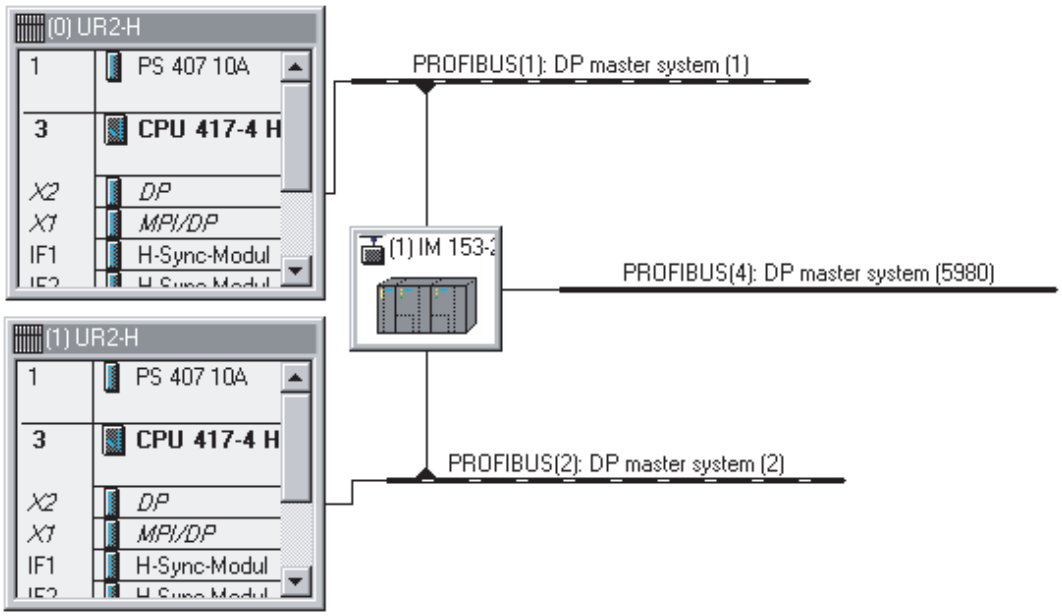

Figure 8-3 HW Config Minimum configuration of an S7-400H with Y link

8.2.2 Configuring underlying DP slaves

Configuring underlying DP slaves

The underlying DP slaves are configured in *STEP 7*.

1. If you have not done so, start *STEP 7* and in HW Config open your SIMATIC H station.
2. If the required DP slaves cannot be configured directly, import the relevant GSD files using the **Options > Install new GSD** menu command.

   Result: The DP slaves are displayed in the **PROFIBUS-DP\Additional Field Devices** directory in the hardware catalog.
3. Drag the required DP slaves from the subdirectories of **PROFIBUS-DP** out of the hardware catalog to the underlying DP master system.
4. Configure the DP slaves using *STEP 7*.

Result

During configuration of the underlying DP slaves HW Config checks that the quantity structure is adhered to and displays a relevant error message if it is exceeded.

PROFIBUS address of the IM 153-2 in the underlying DP master system

In the underlying DP master system the two IM 153-2 use the addresses 1 and 2. In addition, the address 125 is blocked for DP slaves. The first possible address for an underlying DP slave is 3.

Editing the DP slaves in the user program

The process data of the DP slaves should only be accessed via the process images in the user program.

8.3 Configuring for DP standard master mode

8.3.1 GSD files

For DP standard master mode, the Y link and the DP slaves are configured via GSD files, for example with *COM PROFIBUS*.

Template files

Template files have been created for the Y link that can be used to generate the finished GSD file:

- y_link_2bax1.dat f· IM 153-2 (6ES7153-2BA01-0XB0 and 6ES7153-2BA81-0XB0)

These template files do not yet contain any module identification for DP slaves.

Module IDs must be entered into the respective GSD file for each DP slave you wish to use in the Y link. There is a software tool available for this purpose ("GSD Tool for IM 157 / IM 153-2")

GSD file off the Internet

You can download the template files and the GSD tool free of charge at:

http://support.automation.siemens.com

Search for the entry with the number 15294662.

The GSD files for the DP slaves supplied by Siemens AG are also to be found at this Internet address. Enter the search term "GSD" and select the "Downloads only" search area.

Creating a GSD file

Download the relevant template file and the GSD Tool from the aforementioned Internet address and follow the accompanying instructions.

Note

Disclaimer

Siemens AG assumes no liability for damage arising from using the GSD Tool; in particular not for personal, material or financial damage that constitutes consequential damage directly or indirectly connected to the use of the GSD Tool.

We offer no support for the application of the GSD Tool.

The GSD Tool creates a GSD file for the Y link from the template and the GSD files of the DP slaves to be used that you have added:

- si058052.gsd for IM 153-2

8.3.2 How to configure Y link

Procedure

Configure the Y link using your configuration tool (for example *COM PROFIBUS*) just like any other DP slave on PROFIBUS DP.

For this purpose download the complete GSD file for the Y link to your configuration tool.

Notice

When configuring with GSD file

If a Y link with IM 153-2BA01 is configured using the GSD file it will not start because the "MFLB" user parameter is set to 6ES7153-2BA81-0XB0 by default.

When an IM 153-2BA01 is used you must reset the "MFLB" user parameter to 6ES7153-2BA01-0XB0.

Parameter assignment and configuration frame

The frame length for parameter assignment depends on the number of PA field devices in use and may amount to a maximum of 223 bytes.

The frame length for parameter assignment depends on the number and configuration of the DP slaves in use and may amount to a maximum of 244 bytes.

You can find the description of the parameter assignment and configuration frame on the Internet at:

http://support.automation.siemens.com

Search for the entry with the number 13406349.

Restrictions

Functions that are based on reading the configuration prior to initially assigning the parameters for the Y link, are not supported. For this reason for example the CP 5431 cannot be used as DP master. It is equally not possible to control variables with *COM PROFIBUS* until the Y link parameters have been assigned.

8.3.3 Configuring underlying DP slaves

Requirement

The product designations for the required DP slaves must have been entered in the GSD file of the IM 153-2.

Notice

For the redundant mode only those DP slaves may be configured that have the entries "Begin of Device" or "Begin of Device h supported" in their GSD file.

Configuration principle

To configure the Y link select the manufacturer's specifications for the SP slaves in your configuration tool (Product and, where applicable, module designation). The specifications for the DP slaves must be entered in ascending order corresponding to their addresses.

An example of a configuration is shown in the figure below.

Procedure

1. In your configuration tool move to the DP slave configuration.
2. Enter the manufacturer designation (for example SIEMENS ET 200S (IM151 BASIC) for the first DP slave in the "Order number" or "Module" field and apply this in the first slot. Set the PROFIBUS address for the DP slave.

   Repeat this procedure for all of the DP slaves in use.
3. Terminate the entries and complete configuration. The further procedure (for example saving, compiling, ...) is identical to other DP slaves.

PROFIBUS address of the IM 153-2 in the underlying DP master system

In the underlying DP master system the two IM 153-2 use the addresses 1 and 2. In addition, the address 125 is blocked for DP slaves. The first possible address for an underlying DP slave is 3.

Configuring with *COM PROFIBUS*

For SIMATIC S5 the DP slaves are integrated via their GSD files as a standard slave in *COM PROFIBUS* (V3.1 and later).

1. Copy the GSD file of the IM 153-2 into the *COM PROFIBUS* directory: **...COMPBxx\GSD**.
2. Start *COM PROFIBUS* and select the **File > Read in GSD file** menu command.

   Result: The IM 153-2 is displayed in the hardware catalog during slave configuration.
3. Configure the DP slaves using *COM PROFIBUS*.

Example: View of configuration in *COM PROFIBUS*

The figure below shows an example of the view of a configuration for the Y link using *COM PROFIBUS*.

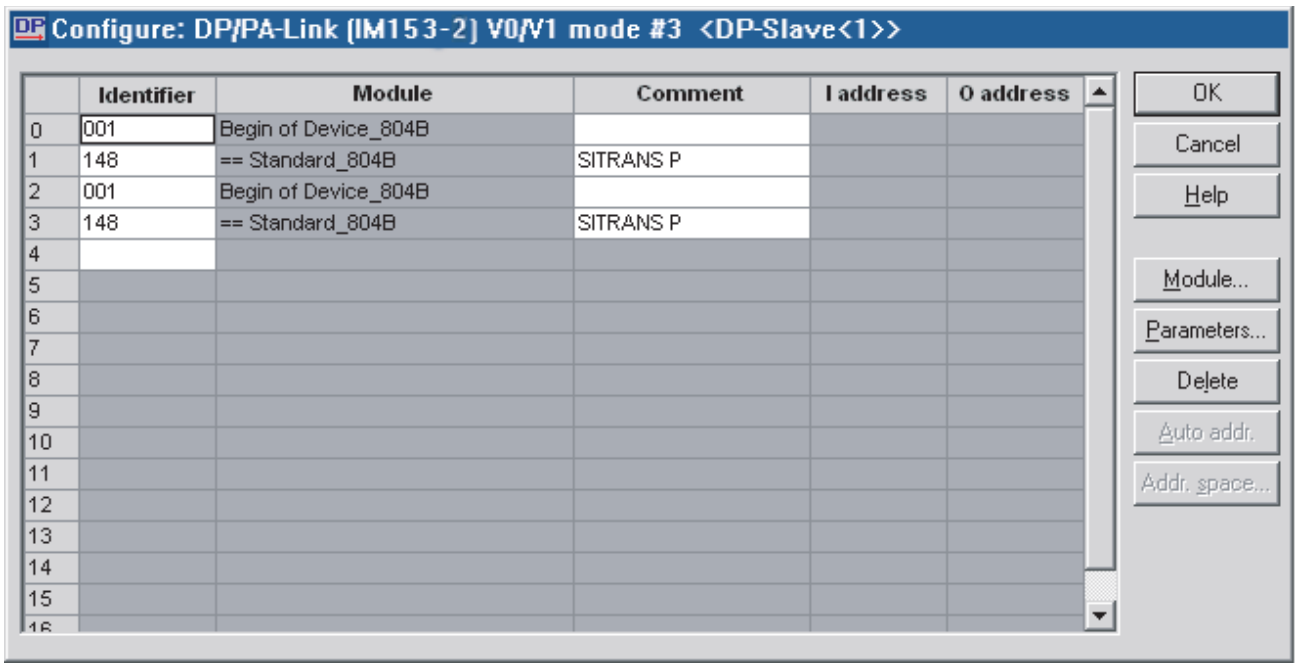

Figure 8-4 Example of a configuration with *COM PROFIBUS*

How to enter a PROFIBUS address

1. In the "Module" column select the "Begin of Device" of the relevant DP slave and select the "Parameter..."button.
2. In the "Values" column enter the desired PROFIBUS address and confirm with "OK".

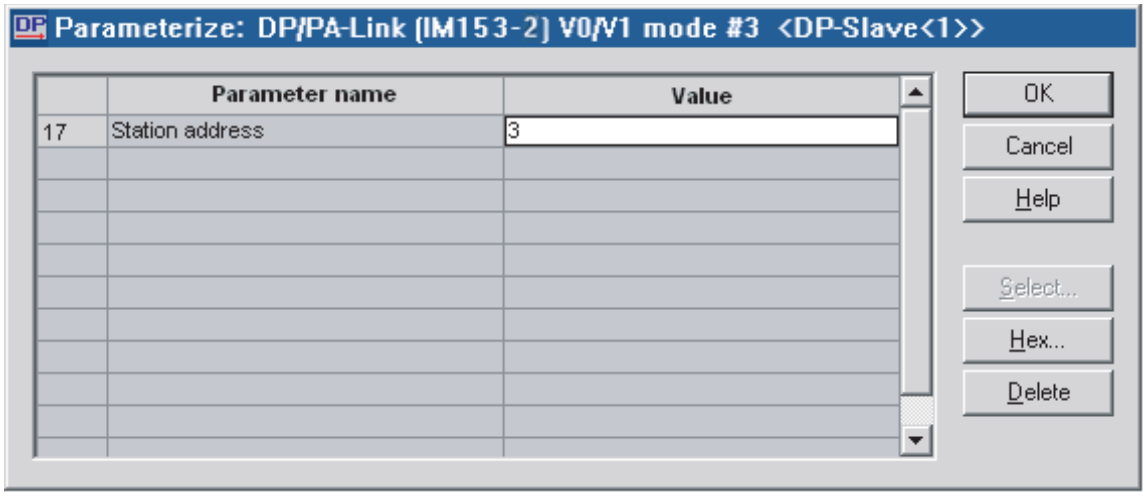

Figure 8-5 Entering the PROFIBUS address

Operation of the DP/PA-Link and Y-Link 9

Terms

Some of the following information applies to both the DP/PA link with its PA field devices and to the Y link with its underlying DP slaves. In such instances, the following terminology will be used for the sake of clarity:

- "Link" stands for DP/PA Link and Y Link
- "Slaves" stands for PA field devices and underlying DP slaves.
- "Underlying master system" stands for PA master system and underlying DP master system.

9.1 Start-up delay

Definition

During start-up, the link includes the slaves of the underlying master system in the data cycle. The slaves are parameterized and configured and the inputs of the slaves are read in.

To ensure a reproducible start-up and to prevent inadvertent switching of outputs, the link issues CLEAR frames on the underlying master system during this phase, i.e. the outputs of the slaves are put into a safe state.

Configured starting behavior

The start-up behavior depends on the configured starting behavior relating to the plant configuration.

Table 9-1 Configured starting behavior

Configured starting behavior	Output data are output by the link if ...
Starting if required configuration ≠ actual configuration	• all of the slaves are parameterized and configured, or • The start-up delay has expired and fewer slaves have been parameterized / configured than had been planned for.
Starting if required configuration = actual configuration	• all of the slaves are parameterized and configured. Comment: If during the start-up delay not all slaves are configured or parameterized, the link automatically repeats the start-up.

The status of the start-up delay can be evaluated in the "Status Message" diagnostic block of the diagnostic frame.

9.2 Behavior after certain events in the redundant mode

Behavior of the IM 153-2

The table below shows the behavior of the IM 153-2 following certain events in the redundant mode.

Table 9-2 Behavior after certain events in the redundant mode

Event	Response
Master-reserve switchover with a modified configuration	The link is switched over bumpless from the active channel to the channel that has up to now been passive.
Failure of a CPU	If this causes the active channel of the redundant DP master system to fail: see failure of the active channel. Otherwise: see failure of the passive channel.
Failure of the active channel.	The link is switched over bumpless from the active channel to the channel that has up to now been passive. The channel that has failed is displayed with the relevant IM 153-2 by the "BF" 1 LED.
Failure of the passive channel.	No impact on the link. The channel that has failed is displayed with the relevant IM 153-2 by the "BF" 1 LED.
Failure of an IM 153-2	A diagnostic message is generated in the system. If the active IM 153-2 fails, there is a bumpless switchover to the channel that has been passive up till then.

9.3 Starting behavior

9.3.1 Starting behavior of the DP/PA link in non-redundant mode

Starting behavior

The flow chart below shows the starting behavior of the IM 153-2 after POWER ON.

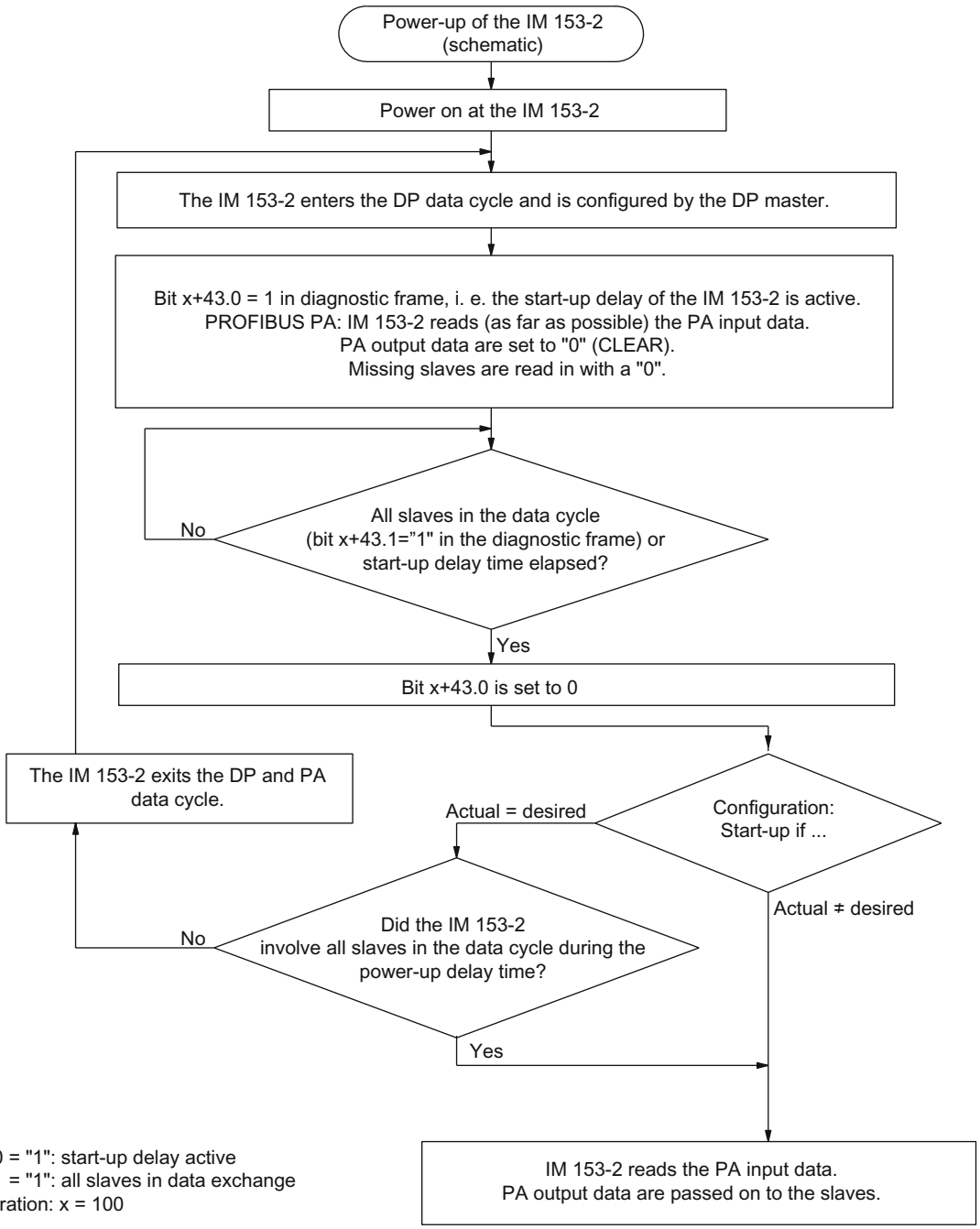

Bit x+43.0 = "1": start-up delay active
Bit x+43.1 = "1": all slaves in data exchange
In S7 operation: x = 100

Figure 9-1 Starting behavior of the IM 153-2 after POWER ON

Prerequisite for start-up of the IM 153-2

- A valid PROFIBUS address is set on the IM 153-2.
- The DP master on the higher level PROFIBUS DP is in operation.
- The link is correctly configured.

The further starting behavior of the DP/PA link depends on whether it is working in the non-redundant or redundant mode.

9.3.2 Starting behavior in redundant mode

Starting diagram of the IM 153-2 on S7-400H

During start-up the two IM 153-2 respond independently of one another:

- Each DP master configures and patameterizes its IM 153-2 (independently from other DP masters) and sends the the corresponding configuration.
- In failure-free operation the IM 153-2 is activated that is connected to the subsystem of the master CPU.
- As soon as the other DP master has also configured and parameterized its IM 153-2 correctly and has sent the configuration in full, the IM 153-2 is available as a reserve.

  The IM 153-2 on the subsystem of the reserve CPU is passive. If the active IM 153-2 the other is able to continue editing the slaves.

The figure below shows a simplified representation of the mutually independent behavior of the two IM 153-2.

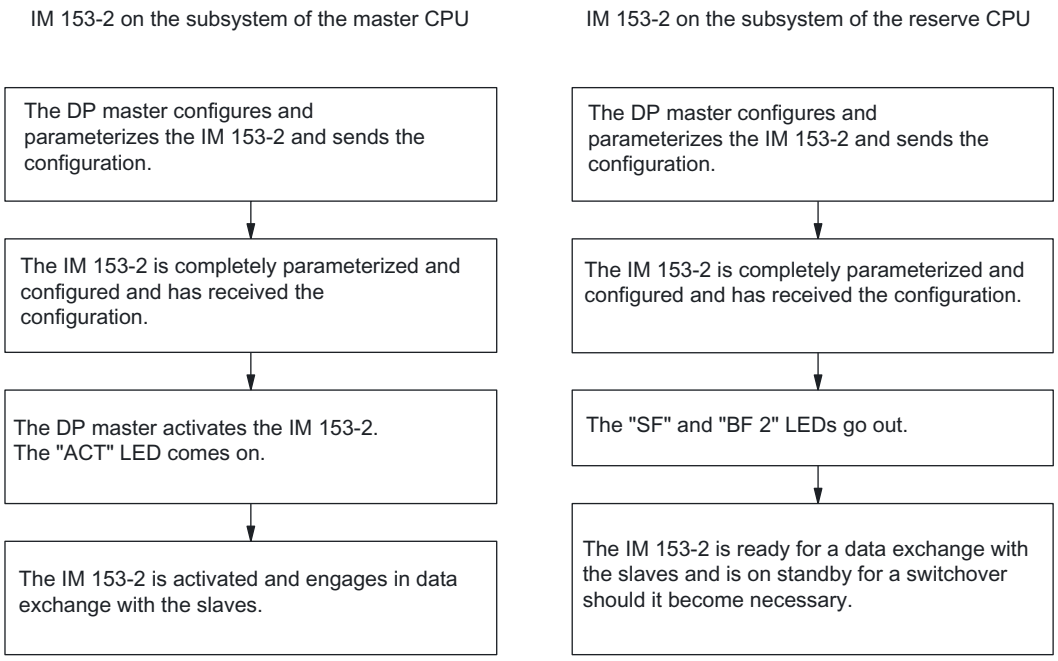

Figure 9-2 Starting behavior of the two IM 153-2 in the redundant mode

Starting of the IM 153-2 with flying redundancy

For flying redundancy only one IM 153-2 is configured and parameterized. The second IM 153-2 is not configured and parameterized; it is nevertheless ready for a switchover.

Maintenance and service

10

10.1 Replacing IM 153-2 or Y couplers

How to replace defective modules

Perform the following steps to replace a defective IM 153-2 or a defective Y coupler.

1. Disconnect the power supply of the faulty module.
2. Unplug the bus connector from the PROFIBUS DP interface of the defective module.
3. Replace the defective module.
4. Plug the bus connector into the PROFIBUS DP interface of the new module.
5. Connect the power supply of the new module,

In case of redundancy

Note

When replacing the active IM 153-2 ("ACT" LED ON), the link will only continue to run smoothly, if:

- on the passive IM 153-2 the BF LED is neither lit up or flashing, nor is the SF LED flashing in 0.5 Hz cycles
- it in a flying redundancy system it is apparent from the master diagnostics that both IMs are available. In this case, the BF LED can flash.

Have you replaced an active IM 153-2 ("ACT" LED on)?	Have you replaced a passive IM 153-2 ("ACT" LED off)?
In this case in the link there was a switchover to the other IM 153-2 and this also upholds the data traffic to its DP master.	No change in data traffic The active IM 153-2 has upheld the data traffic to its DP master.
Does the new IM 153-2 have a different product status than the other one that has not been replaced?	
If after replacement the IM 153-2 that has just been replaced goes "into STOP" (all LEDs flashing), then the versions are not compatible. In this case you must switch off the link and upgrade both IM 153-2 or use a compatible version. Please contact your Siemens representative.	

10.2 Replacing DP/PA couplers

Prerequisite

If replacing a DP/PA coupler FDC 157-0, its ACT LED should not light up. If the ACT LED is illuminated, then multiple PA field devices can fail.

Replacing DP/PA couplers

To replace a defective DP/PA coupler, perform the following steps:

1. Disconnect the power supply of the faulty module.
2. Disconnect the PROFIBUS PA connection of the defective module.
3. Unplug the bus connector from the PROFIBUS DP interface of the defective module.
4. Replace the defective module.
5. When using the diagnostic function of the DP/PA coupler FDC 157-0:
   Set the PROFIBUS address at the DIL switches.
6. When using the redundancy mode of the DP/PA coupler FDC 157-0:
   Set the redundancy mode at the DIL switches.
7. Connect the PROFIBUS PA to the new DP/PA coupler.
8. Plug the bus connector into the PROFIBUS DP interface of the new module.
9. Connect the power supply of the new module,

Change systems to redundancy

To use the ring redundancy or coupler redundancy, you can upgrade an existing system by means of DP/PA couplers FDC 157-0. Install the redundant DP/PA coupler pair to the right of the remaining DP/PA couplers (max. 3).

Use the BM FDC 157-0 bus module for the redundant DP/PA coupler pair.

10.3 Replacing active field distributors

Replacing active field distributors (AFD)

You can replace the AFD during operation.

Perform the following steps to replace a defective AFD:

1. Remove the 4 screws of the housing cover using a crosstip screwdriver.
2. Disconnect the PA1 and PA2 main lines from the AFD.
3. Disconnect the PA field devices from the AFD.
4. Replace the defective module.
5. Connect the PA field devices to the new AFD.
6. Connect the PA1 and PA2 main lines to the new AFD.
7. Tighten the 4 screws on the enclosure.

Replacing active field splitter (AFS)

Perform the following steps to replace a defective active distributor splitter (AFS):

1. Remove the 4 screws of the housing cover using a crosstip screwdriver.
2. Disconnect the equipotential bonding line from the AFS.
3. Disconnect the PA1 and PA2 main lines from the AFS.
4. Replace the defective module.
5. Connect the equipotential bonding line to the new AFS.
6. Connect the PA1 and PA2 main lines to the new AFS.
7. Tighten the 4 screws on the enclosure.

10.4 Firmware update

10.4.1 When should you update the IM 153-2?

Following (compatible) functional extensions or improvements to performance you should update the IM 153-2 interface module to the respective most recent firmware version.

10.4.2 How to update the IM 153-2Bxx1

Where can you obtain the most recent firmware version?

You can obtain the most recent firmware versions from your Siemens representative, or download it from the Internet at:

http://support.automation.siemens.com

Search for the entry with the number 15350678.

Tip:

- Make a note of your current firmware version before you start the update.
- If you then meet with any problems with the new firmware, you can always download the previous (current) firmware from the Internet and restore it on the interface module.

Principle

An update is possible for IM 153-2 from order no 6ES7153-2Bxx1-0XB0. For this you require *STEP 7* V5.4 and later.

There are two ways to update the module:

- directly via PROFIBUS DP
- from the PG / PC via PROFIBUS DP and CPU

After a successful update, a sticker with the updated status of the firmware should be affixed to cover the previous status of the firmware of the IM 153-2.

With the IM 153-2Bxx1-0XB0 it is possible to update the firmware of the two interface modules while the redundant mode is being run. Updating takes place with the support of *STEP 7* and has no retroactive effect on the current application. The firmware in a redundant system is (directly) updated by the PG / PC via PROFIBUS DP.

Requirements for updating via PROFIBUS DP

- The IM 153-2 in the station that is to be updated, must be accessible online.
- The files with the current (new) firmware version must be available in the file system of your PD / PC.

To **update a redundant system** there are two additional requirements:

- Both interface modules are IM 153-2Bxx1-0XB0 and have been parameterized accordingly.
- The link with redundant IM 153-2 is operated
  - on S7-400H
  - on any redundant DP masters with GSD as of rev. 5

An update of both interface modules in a redundant system supported by *STEP 7* is **not** possible if the IM 153-2Bxx1-0XB0 modules are operated as spare parts for older interface modules (for example IM 157).

Example configuration

Update directly via PROFIBUS DP

The PD / PC with the update files is connected directly to the PROFIBUS interface of the IM 153-2 (see figure below).

In the SIMATIC Manager select the **PLC > Accessible nodes** menu command. In the list that is displayed select the required IM 153-2 and select the **PLC > PROFIBUS > Update firmware** menu command. The remaining procedure is described in the *STEP 7* online help.

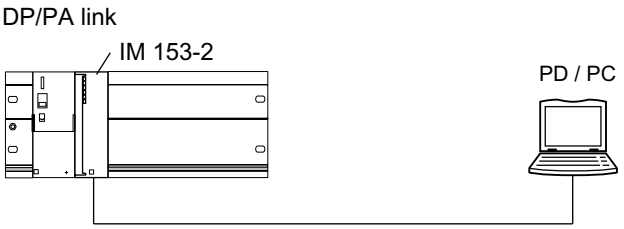

Figure 10-1 Update directly via PROFIBUS DP (PG / PC is directly connected to the IM 153-2)

Update via MPI to the CPU and on via PROFIBUS DP

The PD / PC with the update files is connected to the MPI interface of the CPU. The IM 153-2 is connected to the 2nd interface of the CPU via PROFIBUS DP. The IM 153-2 has to be integrated into the STEP 7 project on the CPU.

Open HW Config and select the desired IM 153-2. Select the **PLC > Update firmware** menu command. The remaining procedure is described in the *STEP 7* online help.

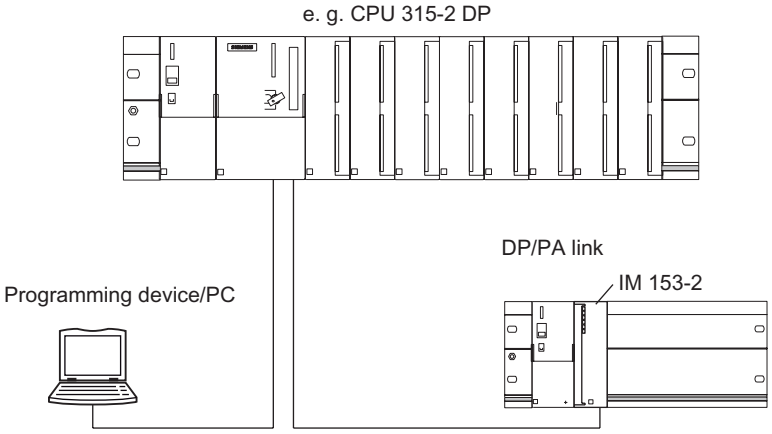

Figure 10-2 Update via MPI to CPU and on via PROFIBUS DP (PG / PC is connected to CPU)

Restart after update

In the *STEP 7* user interface it is possible to set whether

- the IM 153-2 automatically executes a reset after a successful update to start with the newly uploaded firmware.

Caution

If the "Activate firmware after downloading" box is ticked, there will be a brief link failure. If you have not made any provisions for this situation, the update will cause a CPU STOP as a result of rack failure.

- The IM 153-2 must be reset by switching off the supply voltage before the IM 153-2 starts up with the new firmware when the supply voltage is switched on.

If the update was completed successfully, the next reset thereafter or switching the supply voltage on / off, start-up of the IM 153-2Bxx1 will take **approx. 60 seconds longer** than for normal start-up.
All start-ups thereafter require the usual time.

Update not successful

If the update fails, after the supply voltage is switched on / off the IM 153-2 automatically starts with the ("old") firmware that was current up to that time.

10.5 Maintenance

Maintenance

The transfer characteristics of the DP/PA couplers, the active field distributors (AFD) and splitters (AFS) are stable over long periods and regular maintenance is unnecessary.

Functions 11

11.1 IM 153-2

11.1.1 Time synchronization on the underlying master system

Features

The IM 153-2 interface module, 6ES7153-2Bxx1-0XB0 and higher, supports time synchronization on the underlying master system.

- The IM 153-2 sends the current time to the underlying master system whenever
  - a time synchronization takes place on the higher level PROFIBUS DP,
  - if a valid configuration for the underlying mastersystem is available in the IM 153-2, and
  - the underlying master system is operating.
- Synchronization on the underlying master system takes place at the synchronization intervals that have been set on the higher level PROFIBUS DP.
- Compared to the time received on the higher level PROFIBUS DP, accuracy deteriorates slightly. Accuracy within 10 ms is always guaranteed.

Operating steps for activation

You activate the time synchronization on the underlying master system by performing the following steps:

1. Complete the higher level PROFIBUS DP with the time master.
2. Activate the time synchronization in the Properties of the DP master.

Note

In the H system you have to insert a time master in both higher level PROFIBUS DP systems and activate the time synchronization in the Properties of the DP master.

Time synchronization then takes place in the underlying master system.

Time-of-day format

The time-of-day is distributed to the underlying system in the ISP format.

In this process the entire ISP frame is transferred in exactly the format that the IM 153-2 receives from the higher level PROFIBUS DP.

The configuration of the frame and the sequence are described in:
InterOperable Systems™ Project, Fieldbus Specification, System Management Services Rev. 3.0 dated 19.10.1993 (compiled by ISP Foundation)

11.1.2 Redundancy with IM 153-2

Usage

You can operate the IM 153-2Bxx1 redundantly

- on SIMATIC S7-400H (for example in the Y link on CPU 417-4H)
- according to standard
  Specification Slave Redundancy V1.2, Nov. 2004 of the PROFIBUS User Organization; Order No: 2.212
  - System Redundancy (SR)
  - Flying Redundancy (FR)

Requirements

- Installation on active bus modules

  The 6ES7195-7HD10-0XA0 and 6ES7195-7HD80-0XA0 bus modules ensure high availability of the link and shorter switchover times with redundancy.
- 2 x IM 153-2 on BM IM/IM bus module

  The arrangement specifications named in the chapter on *Mounting* apply to the active bus modules and interface modules used.
- System Redundancy (SR) is possible with IM 153-2 from 6ES7153-2Bxx1-0XB0.
- Flying Redundancy (FR) is possible with IM 153-2 from 6ES7153-2Bxx1-0XB0.
  - The redundant master system must be configured according to the requirements made of H systems.
  - For configuring Flying Redundancy the current version of the Java GSD creation tool is required.

  Note

  STEP 7 provides no support for configuring an H system with flying redundancy.
- The SYNC/FREEZE function must not be activated during the redundant mode.

Note

If the SYNC / FREEZE in a redundant system is activated nevertheless the user bears the responsibility for the behavior of the H system (for example when switchovers take place).

- You can only use the IM 153-2 in a redundant system on DP masters that support the "Fail-safe" parameter. On DP masters that do not support this parameter, the IM 153-2 will not start and the BF LED flashes.

  Tip: You can tell from the GSD file of the DP master whether it supports "Fail-safe".

Compatible versions

If you use the DP/PA link or Y link in a redundant configuration you must use compatible versions for the two IM 153-2.

You can replace compatible versions of the IM 153-2 interface module with "System modification during operation".

Please refer to the chapter *Compatibility to precursor modules* for information on compatibilities and arrangement rules.

Note

The functionalities that can be used are limited to the respective lower order numbers or the earlier version.

S7-400H as DP Master

You require *STEP 7* V5.0 or later and the *SIMATIC S7 H Systems* software package to configure the S7-400H system. With *STEP 7* V5.3 or later you no longer require *SIMATIC S7 H-Systems* additionally.

DP master 1 and DP master 2:

- Execute the same user program
- Have the same parameterization and configuration for the IM 153-2.

S5-115H / -155H as DP master

If you use the IM 153-2 on an S5-H system then you must configure two DP master systems in the *COM PROFIBUS*.

Voltage supply for the IM 153-2

To ensure availability in the redundant mode with 2 x IM 153-2, we recommend using a separate power supply unit for each IM 153-2.

See also

Compatibility of the IM 153-2 (Page 2-13)

11.1.3 Reading and writing records

Procedure for reading and writing data records

Depending on the operating mode of the DP master (S7-compatible or DPV1), data records of the IM 153-2 and the underlying slaves can be read and written by different methods.

- Reading data records with SFC 59 "RD_REC" or SFB 52 "RDREC"
- Writing data records with SFC 58 "WR_REC" or SFB 53 "WRREC"
- Reading and writing records with a PD / PC via communication links, for example with *SIMATIC PDM*

Table 11-1 Procedure for reading and writing data records

	S7-compatible DP master	DPV1 master
Data records of the IM 153-2	• SFC 59 "RD_REC" • Reading with PD / PC	• SFC 59 "RD_REC", SFB 52 "RDREC" • SFC 58 "WR_REC", SFB 53 "WRREC" • Writing / reading with PD / PC
Data records of underlying slaves	• SFC 58 "WR_REC" • SFC 59 "RD_REC" • Writing / reading with PD / PC	• SFC 59 "RD_REC", SFB 52 "RDREC" • SFC 58 "WR_REC", SFB 53 "WRREC" • Writing / reading with PD / PC

Data records of the IM 153-2

Depending on the operating mode of the DP master (S7-compatible or DPV1) the IM 153-2 supports reading and writing of the following data records:

- on the DPV1 master:
  - Data records 0 and 1 (diagnostics data, read only)
  - Data records 255 ...(I&M data)
- on the S7-compatible master
  - Data records 0 and 1 (diagnostics data, read only)

Parameters for SFC 58 "WR_REC" and SFC 59 "RD_REC"

You will find the values required for the call parameters LADDR and REC_NUM and possible error information in the return value RET_VAL in the table below.

Table 11-2 Call parameters for SFC 58 "WR_REC" and SFC 59 "RD_REC"

	LADDR	REC_NUM	Access
Diagnostic data of the IM 153-2	Diagnostic address of the IM 153-2	0 or 1	read only
I&M data of the IM 153-2	Diagnostic address of the IM 153-2	255 …	read / write
buffered diagnostic data of an underlying slave (out of the IM 153-2) [1]	Diagnostic address of the IM 153-2	PROFIBUS address of the underlying slave	read only
random data record of an underlying DPV1 slave	logical address of the underlying slave or the underlying module [3]	Data record number[2]	read / write [2]

[1] Only on the DPV1 master and for configured slaves

[2] depending on the type of the underlying slave or underlying module

[3] specify data record of slot 0 ⇒ diagnostic address
specify data record of slot 1 ⇒ address of slot 1
specify data record of slot 2 ⇒ address of slot 2
and so on.

Error information of the IM 153-2

Table 11-3 Error information of the IM 153-2

RET_VAL (W#16#…)	Description
0000	No error
80B6	The slave or module refuses to read / write a data record or does not recognize this data record. ⇒ set mode of the DP master to DPV1
80BB	Requested service is not supported
80BC	Node not available
80BD	Data record number incorrect

The other functions of the SFC 58 "WR_REC", SFC 59 "RD_REC", SFB 52 "RDREC" and SFB 53 "WRREC" are described in the *STEP 7* online help.

11.1.4 Identification and maintenance data (I&M data)

Definition and features

Identification and maintenance data (I&M) is information stored in a module to support you in

- Checking the plant configuration
- Locating hardware modifications in a plant
- Correcting errors in a plant

Identification data (I data) are information on the module, such as order number and serial number, some of which are printed onto the module housing. I data are manufacturer information about the module and are for reading only.

Maintenance data (M data) are system-related information, such as the installation location and installation date. M data are created during configuration and written onto the module.

Modules can be uniquely identified online by means of the I&M data.
From IM 153-2Bxx1 up these data are available on the DP/PA link and Y link.

Note

Only one DP master can access the I&M data of a DP/PA link or Y link at any given point in time.

Reading and writing the I&M data with *STEP 7*

In *STEP 7* the I&M data are displayed in the "Module status - IM 153-2" and "Properties - DP slave" tabs (please refer to the *STEP 7*) online help.

The M data of modules can be entered in HW Config (for example in a dialog box during configuration).

The I&M data are accessed incompliance with the IEC 61158-6 standard.

In the H system the interface module from which the I&M data are to be read must be accessible online.

Reading and writing the I&M data without *STEP 7*

If you want to use the I&M data without using *STEP 7* you must access the data as specified in the PROFIBUS Guideline – Order No. 3.502, Version 1.1 of May 2003.

You must address the interface module (slot 245 or 246) from which the I&M data are to be read in theH system. Slot 245 identifies the left-hand interface module, slot 246 the right-hand interface module on the BM IM/IM.

Example for reading the I&M data

The user can specifically access certain I&M data via **Read data record**. This requires a two-stage access:

1. A directory is stored in data record 248 containing the data record numbers belonging to the various
indices (see table below).

Table 11-4 DS 248 configuration for DP/PA link or Y link

Content	Length (bytes)	Coding (hex)
Header information		
ID of content directory	2	00 01
Index of content directory	2	00 00
Length of successive blocks in bytes	2	00 08
Number of blocks	2	00 05
Block information for I&M data		
SZL-ID	2	F1 11
relevant data record number	2	00 EA
Length of data record	2	00 40
Index	2	00 01
SZL-ID	2	F1 11
relevant data record number	2	00 EB
Length of data record	2	00 40
Index	2	00 02
SZL-ID	2	F1 11
relevant data record number	2	00 EC
Length of data record	2	00 40
Index	2	00 03
SZL-ID	2	F1 11
relevant data record number	2	00 ED
Length of data record	2	00 40
Index	2	00 04
8 bytes of block information for additional data record objects		
	Σ: 48	

2. The section
of the I&M data that is assigned to the corresponding index is to be found under the relevant data record number (see table below: *Structure of the I&M data*).

The length of all data records with I&M data is 64 bytes.

The data records are structured according to the principle shown in the followng table.

Table 11-5 Structural principle of data records with I&M data

Content	Length (bytes)	Coding (hex)
Header information		
SZL-ID	2	F1 11
Index	2	00 0x
Length of the I&M data	2	00 38
Number of blocks with I&M data	2	00 01
I&M data		
Index	2	00 0x
I&M data relating to the respective index (see table below)	54	

Structure of the I&M data

The data structures of the I&M data correspond to the specifications of the PROFIBUS Guideline – Order No. 3.502, Version 1.1 of May 2003.

Table 11-6 Structure of the I&M data

I&M data	Access	Default setting	Explanation
Identification data 0: Index 1 (data record 234)			
MANUFACTURER_ID	Read (2 bytes)	2A hex (= 42 dec)	The name of the manufacturer is stored here. (42 dec = SIEMENS AG)
ORDER_ID	Read (20 bytes)	depending on the module	The order number of the module is stored here.
SERIAL_NUMBER	Read (16 bytes)	depending on the module	The order number of the module is stored here. This facilitates unique identification of the module.
HARDWARE_REVISION	Read (2 bytes)	depending on the module	The order version of the module is stored here. Is increased when the product release or the firmware of the module changes.
SOFTWARE_REVISION	Read (4 bytes)	Firmware version	Gives information on the firmware version of the module If the firmware version number is increased, then the product release of the module (HARDWARE_REVISION) is also increased.
REVISION_COUNTER	Read (2 bytes)	0000 hex	Reserved
PROFILE_ID	Read (2 bytes)	F600 hex	Generic Device
PROFILE_SPECIFIC_TYPE	Read (2 bytes)	0005 hex	on interface modules
IM_VERSION	Read (2 bytes)	0101 hex	Gives information on the version of the I&M data. (0101 hex = Version 1.1)
IM_SUPPORTED	Read (2 bytes)	000E hex	Gives information on the existing I&M data. (Index 2 bis 4)

I&M data	Access	Default setting	Explanation
Maintenance data 1: Index 2 (data record 235)			
TAG_FUNCTION	Read / write (32 bytes)	–	Enter a system-wide unique identification for the module here.
TAG_LOCATION	read / write (22 bytes)	–	Enter the installation location of the module here.
Maintenance data 2: Index 3 (data record 236)			
INSTALLATION_DATE	Read / write (16 bytes)	–	Enter the installation date for the module and, if necessary, the relevant time.
RESERVED	Read / write (38 bytes)	–	Reserved
Maintenance data 3: Index 4 (data record 237)			
DESCRIPTOR	Read / write (54 bytes)	–	Enter a comment on the module here.

Changes compared to the I&A data up to now

To date the I&A data were extended to include some content in the identification data in compliance with the PROFIBUS Guideline. The mechanism for accessing I&M data was amended in compliance with the PROFIBUS Guideline.

See also

Reading and writing the identification and maintenance data (I&M data) (Page 11-10)

11.1.5 System modification during operation.

11.1.5.1 System modification in S7 standard mode

Procedure

Perform the following steps to add a complete new DP/PA link including the underlying PA master system to an existing system while it is operating.

1. Mount the new DP/PA link.
2. Connect the voltage supply of all of the modules,
3. Connect the PROFIBUS PA to the new DP/PA couplers.
4. Plug the bus connector of the DP master system into the PROFIBUS DP interface of the new IM 153-2.

The whole sequence of a system modification and the requirements that must be met for it are described in detail in the functions manual *System modification during operation by means of CiR* .

You will find the manual on the Internet at:

http://support.automation.siemens.com

Search for the entry with the number 14044916.

11.1.5.2 System modification in redundant mode

Procedure

Perform the following steps to add a complete new DP/PA link or Y link including the underlying master system to an existing system while it is operating.

1. Mount the new link.
2. Connect the voltage supply of all of the modules,
3. DP/PA link only

   Connect the PROFIBUS PA to the new DP/PA couplers.

   Y link only

   Plug the bus connector of the DP master system onto the PROFIBUS DP interface of the new Y coupler.
4. Plug the bus connector of the active channel of the redundant DP master system onto the PROFIBUS DP interface of one of the IM 153-2.
5. Plug the bus connector of the passive channel onto the PROFIBUS DP interface of the other IM 153-2.

This sequence is summarized as a single step "Reconfigure the hardware" in the manual: *Automation system S7-400H, high availability systems* in the chapter:*System modifications during operation*. It gives a detailed description of the entire sequence of a system modification.

You will find the manual on the Internet at:

http://support.automation.siemens.com

Search for the entry with the number 1186523.

11.2 DP/PA coupler FDC 157-0

11.2.1 Reading and writing the identification and maintenance data (I&M data)

Procedure for reading I&M data

You can read and write the identification data in one of the following ways:

- with STEP 7
- Via user interfaces
- Via communication links
- With the upload / download mechanism

Reading and writing the I&M data with STEP 7

HW Config shows the I&M in the "Module status - DP/PA coupler" and "Properties - DP Slave" tabs.

The I&M data is accessed in accordance with standard IEC 61158-6.

Reading and writing the I&M data with STEP 7

Writing I&M data with a PD / PC via communication links, for example with *SIMATIC PDM*

Write the parameters and I&M data via the following menu items:

- **File > Read full upload to PG / PC**.
- **Device > Full download to device**.

Reading and writing the I&M data via user interfaces

Load data records 231 to 234 of the DP/PA coupler. Data record 231 is read-only.

- Reading data records with SFC 59 "RD_REC" or SFB 52 "RDREC".
- Write data records with SFC 58 "WR_REC" or SFB 53 "WRREC".

Reading and writing the I&M data with the upload / download mechanism

Use data record 255 of the DP/PA coupler.

The I&M data is accessed in accordance with the standard *PROFIBUS Guideline, Profile Guidelines Part 1: Identification & Maintenance Functions*, March 2005.

Further information

For further information about SIMATIC PDM, refer to the *PDM V6.0 The Process Device Manager* manual at:

http://support.automation.siemens.com/WW/view/de/21407212

See also

Identification and maintenance data (I&M data) (Page 11-6)

11.2.2 Reading the local LifeList

Local LifeList

The local LifeList renders the status of the PA field device on the equipotential bonding line.

If the DP/PA coupler is used in the DP/PA link, then connected PA field devices are only visible in the local LifeList if they are also configured.

Reading the local LifeList

To read the local LifeList, you have the following options:

- The local LifeList is displayed in graphical form using SIMATIC PDM.
- Via user interfaces:

  Reading data records with SFC 59 "RD_REC" or SFB 52 "RDREC".

  Load data record 50 of the DP/PA coupler.
- Via the PROFIBUS DP slave diagnostics

  Every change to the equipotential bonding line leads to a PROFIBUS DP diagnosis.

Note

Updating the local LifeList

Updating the local LifeList depends on the number of PA field devices. Updating and configuring can take approx. 1 minute.

Further information

For further information about SIMATIC PDM, refer to the *PDM V6.0 The Process Device Manager* manual at:

http://support.automation.siemens.com/WW/view/de/21407212

11.2.3 Read out of the current value and voltage value

11.2.3.1 User data of the DP/PA coupler

User data of the DP/PA coupler

The DP/PA coupler with diagnostics functions has input data only. The data contains the current value on the equipotential bonding line and optional voltage on the equipotential bonding line.

The variables are represented in IEEE 754 format with one byte quality code in accordance with PROFIBUS PA profiles. This is the Float Format to IEEE Standard 754 Short Real Number (floating point format).

Reading the current values and voltage values

You can read the current values and voltages values in one of the following ways:

- PROFIBUS DP (PAE of the CPU)
- Reading data records with SFC 59 "RD_REC" or SFB 52 "RDREC".

  Load data record 56 of the DP/PA coupler.
- Reading records with a PG / PC via communication links, for example with SIMATIC PDM.

User data frame structure

The presentation of a tag in IEEE 754 format requires 4 bytes + 1 status byte. The status byte informs you about the validity of the measured value.

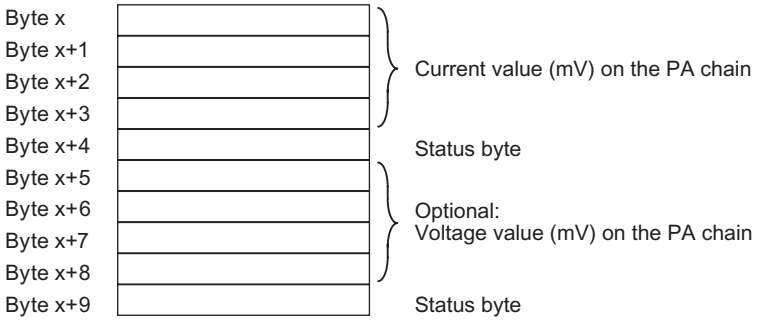

Figure 11-1 User data frame structure

Note

Input data

- Only the actively energizing DP/PA coupler delivers a valid PA current vale to slot 1 in the redundant structure.
- If you insert slot 2 in HW Config, then the passive DP/PA coupler delivers a valid PA voltage value in the redundant structure.
- Only the PA current value is delivered in stand-alone mode.

Voltage measurement on the equipotential bonding line

The optional configuration of slot 2 for voltage measurement on the equipotential bonding line is only possible in a setup with ring redundancy. The PA voltage can be measured on the end of the cable only, i.e. on the passive DP/PA coupler.

The maximum PA voltage on the actively energizing DP/PA coupler is about 31 V.

11.2.3.2 Structure of the current value and voltage value

Measured values in IEEE format (byte x to byte x+3)

Below you can see the presentation of a measured value in IEEE format, and the conversion into a decimal value.

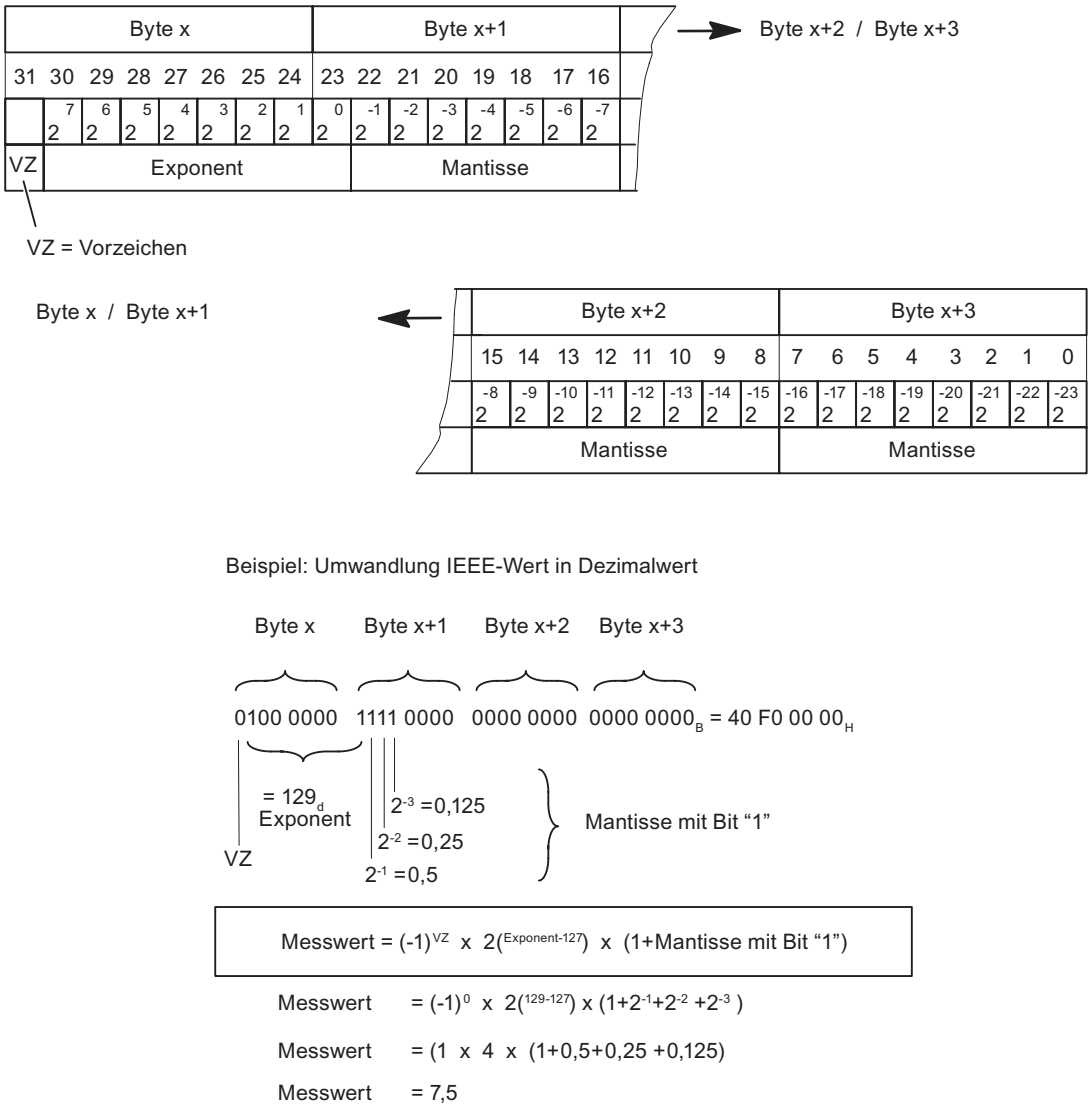

Figure 11-2 Conversion of an IEEE format to decimal value

Syntax of an IEEE status byte (byte x+4)

The syntax of the status byte corresponds to the PROFIBUS PA profile. The following status codes are used with the DP/PA coupler:

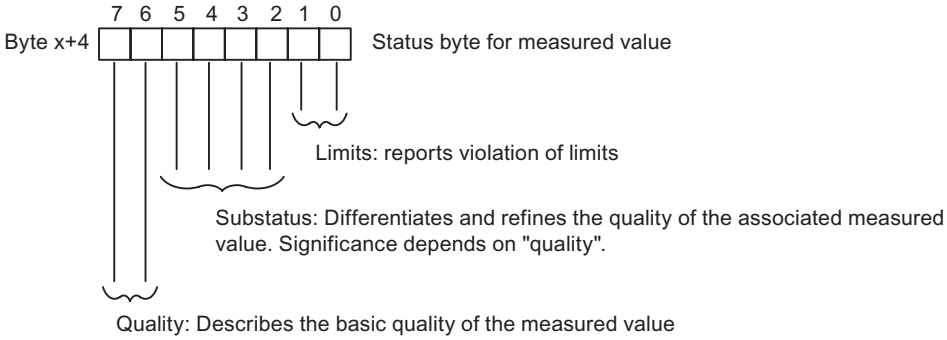

Status codes	
00 0000 00 (0H)	bad, non-specific
00 1000 11 (4FH)	uncertain (initial value), (non-measured value)
00 1001 00 (24H)	bad (maintenance alarm), (wire-break, short circuit, PA redundancy fault, DP/PA coupler defective, signal level poor)
00 1001 01 (25H)	bad (maintenance alarm), Low limit underrange
00 1001 10 (26H)	bad (maintenance alarm), High limit exceeded
01 1010 00 (68H)	uncertain (maintenance demanded), Parameter assignment error, redundancy mode partner incorrect
01 1010 01 (69H)	uncertain (maintenance demanded), Low limit underrange
01 1010 10 (6AH)	uncertain (maintenance demanded), High limit exceeded
10 0000 00 (80H)	good, O.K. (no error)
10 0000 01 (81H)	good, Low limit underrange
10 0000 10 (82H)	good, High limit exceeded

Figure 11-3 Syntax of an IEEE status byte

Note

Maintenance alarm / maintenance demanded

The status codes linked to "maintenance alarm" or "maintenance demanded" are only displayed if the diagnostics of the DP/PA coupler are activated.

The status codes influence the respective bits in the PA status of the diagnostics frame.

Limits

The following limit values are preset:

- PA current: Lower/upper limit: 0 mA / 1000 mA
- PA voltage: Lower/upper limit: 15.5 V/35 V

You can change the limit values in data record 128 of the DP/PA coupler.

Errors when writing the data record mean that current or default limit values are not used. The data record is unacknowledged.

See also

Parameters for diagnostic selection of the DP/PA coupler FDC 157-0 (Page 6-8)

PA status (Page 12-33)

11.2.4 Data records

You need this information if you go beyond the standard applications from STEP 7 and SIMATIC PDM.

Requirements

The DP/PA coupler gives the user data records that are addressed via slot 0 or 1.

The PROFIBUS DP data records are based on the *PROFIBUS PA profile*.

The profile is available from PROFIBUS International (PI) on the Internet at:

http://www.profibus.com

Data records on slot 0

Table 11-7 Data records from the DP/PA coupler on slot 0

Data record no.	Read / Write	Size in bytes	Description
1	r	14	PA diagnostics (diagnostics frame bytes 1 to 14)
18	r	32	TAG, determined from I&M list 1.
24	r	16	Software revision
26	r	2	Device Man ID, determined from I&M list 0.
27	r	16	Device ID
50	r	16	Local LifeList (1 bit status per station)
	• 1 bit per PA field device, the offset corresponds to the station number. • Coding 0: PA field device not available. Coding 1: PA field device available on the local equipotential bonding line.		
56	r	10	Mapping of the input data
	See *User data frame*. 10 bytes of input data are also provided with a configuration with only one slot: PA current and PA voltage.		
60	r	Max. 72	Mapping the diagnostics frame
	See *Diagnostics frame*.		
61	r	8	Mapping the PA redundancy status
	See *PA redundancy status*.		
62	r	16	See *Diagnostic record*.
128	r/w	12	Parameterization of the limit value for PA current and PA voltage
231	r/w	64	I&M list 0 (rating plate)
232	r/w	64	I&M list 1 (TAG)
233	r/w	64	I&M list 2 (date)
234	r/w	64	I&M list 3 (descriptor)
	The data structure of the I&M data corresponds to the definitions from the PROFIBUS Guideline - Order no. 3.502, Version 1.1 from May 2003.		
255	r/w	68	Upload / Download mechanism for I&M objects
	This data set is structured according to the following standard: PROFIBUS Profile Guidelines Part 1: Identification & Maintenance Functions.		

Data records on slot 1

Table 11-8 Data records from the DP/PA coupler on slot 1

Data record no.	Read / Write	Size in bytes	Description
0	r	12	Header (Devicemanagement)
1	r	8	Composite List Directory Entries (Devicemanagement)

Reading and writing data records

To read and write records, use the following SFCs:

- Reading the data record with SFC 59 "RD_REC" or SFB 52 "REC".
- Write the data record with SFC 58 "WR_REC" or SFB 53 "WR_REC".

Further information

For more detailed information on SFCs, refer to the *System Software for S7-300/400 System and Standard Functions* manual.

http://support.automation.siemens.com/WW/view/de/1214574

See also

Identification and maintenance data (I&M data) (Page 11-6)

11.2.5 Diagnostic record 62

Structure of diagnostics record 62

Bytes 0 to 5 of data record 62 contain the standard diagnostics, bytes 6 to 15 the PA status.

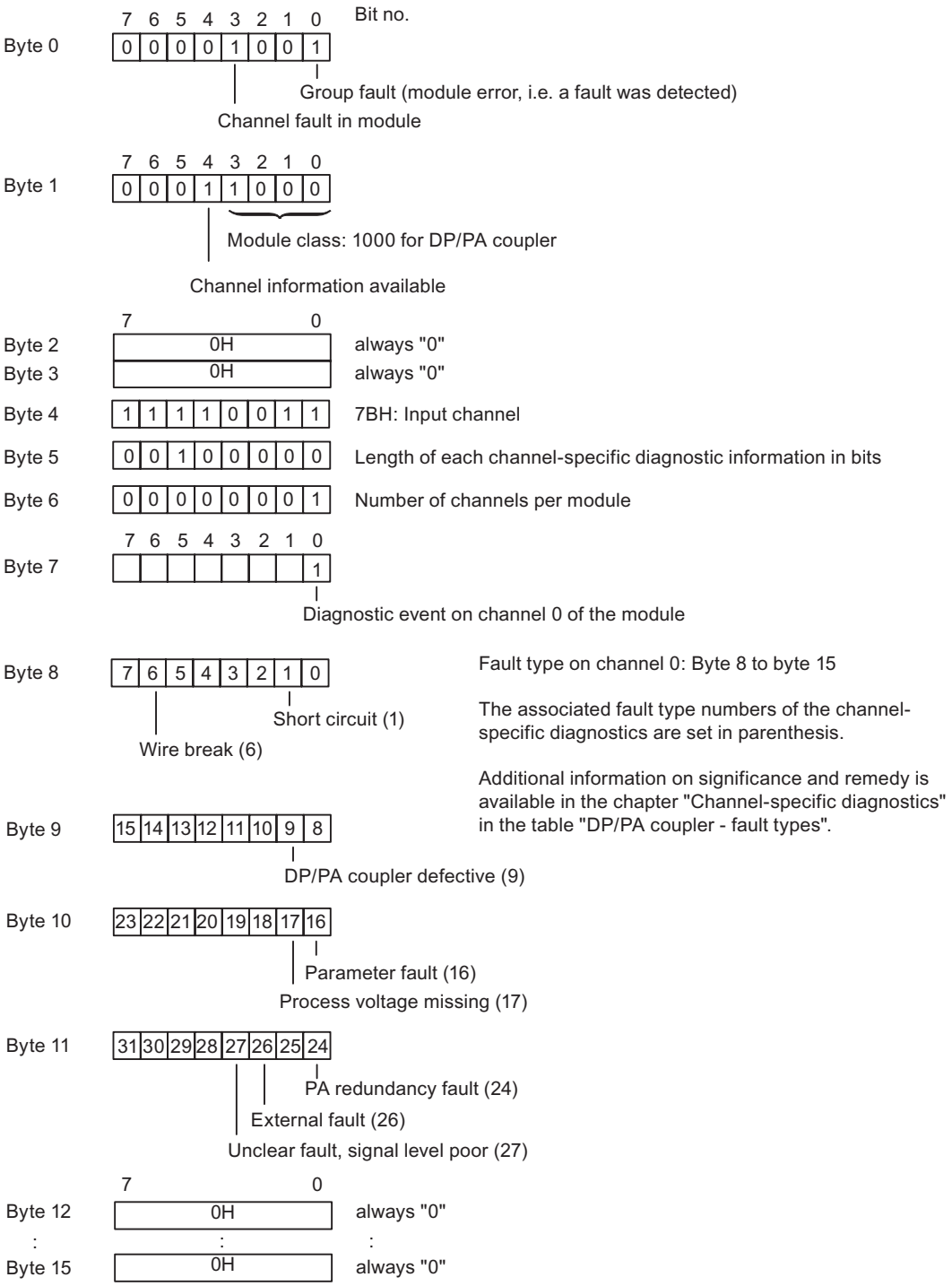

Figure 11-4 Structure of diagnostics record 62

11.2.6 Address space of the inputs

Introduction

The address range of the process input image that is occupied is dependent on the configuration, i.e. by the selection of the relevant entry in the configuring software.

Assignment of the process input image (PII)

The DP/PA coupler FDC 157-0 has 5 or (optional) 10 bytes of input data.

These contain the current value on the equipotential bonding line, as well as (optional) the PA voltage in IEEE754 format (32 bit floating point number) with one byte quality code in accordance with the PROFIBUS PA profile.

Structure of the configuration frame

The DP/PA coupler has slot modeling as the modular slave.

- Slot 0 is the proxy for the entire slave
- Slot 1 is always available
- Slot 2 can be configured (optional)

Module	I/O data in bytes	Consistency	DP ID
Slot 1	5 / 0	byte entire length	94_H
Slot 2	5 / 0	byte entire length	94_H

Interrupt, error and system messages 12

12.1 Diagnostics by means of LED displays

12.1.1 The LED displays of the IM 153-2

Introduction

PA field devices and DP slaves communicate on the same basis. Hence the following simplified terminology is used in this section:

- "Slaves" stands for PA field devices and underlying DP slaves.
- "Underlying master system" stands for PA master system and underlying DP master system.

Status and error messages of the IM 153-2

Table 12-1 Status and error messages of the IM 153-2

SF	SF	Group error (red)
BF 1	BF 1	Bus fault in higher level PROFIBUS DP (red)
BF 2	BF 2	Bus fault in underlying PROFIBUS (red)
ACT	ACT	IM 153-2 has an active channel (yellow)
ON	ON	24V power supply IM 153-2 (green)

LEDs					Meaning	Remedy
SF	BF 1	BF 2	ACT	On		
Off	Off	Off	Off	Off	• No voltage present on the IM 153-2. • Applied supply voltage is not within permissible range. • Hardware fault of the IM 153-2	• Switch on the power supply module. • Check the voltage applied • Replace the IM 153-2.
*	*	*	*	On	Supply voltage is applied to the IM 153-2.	–
On	On	On	On	On	All LEDs are switched on for approx. 1 s. IM 153-2 is starting.	–

SF	SF	Group error (red)
BF 1	BF 1	Bus fault in higher level PROFIBUS DP (red)
BF 2	BF 2	Bus fault in underlying PROFIBUS (red)
ACT	ACT	IM 153-2 has an active channel (yellow)
ON	ON	24V power supply IM 153-2 (green)

LEDs					Meaning	Remedy
SF	BF 1	BF 2	ACT	On		
Off	Off	Off	Off	On	In the non-redundant mode: The IM 153-2 is exchanging data with the DP master and the underlying slaves.	–
					In the redundant mode: the IM 153-2 is passive and ready for switchover.	–
Off	Off	Off	On	On	Only in the redundant mode: The IM 153-2 is active and exchanging data with the DP master and the underlying slaves.	–
Off	Off	Flashes rapidly	*	On	The start-up delay is active on the IM 153-2.	If the IM 153-2 does not fully start up within 20 s, then check in the configuration whether whether the start-up is enabled when desired layout ≠ actual layout.
*	Off	On	Off	On	In the non-redundant mode: The IM 153-2 has not been configured	Check whether the CPU or the DP master is in the RUN mode.
					In the redundant mode: the IM 153-2 is passive and not ready for switchover.	Check whether the H system is in the redundant system state.**
*	On	*	Off	On	No connection to the DP master. Possible causes: • Bus communication to the IM 153-2 is interrupted. • The DP master is not in operation.	• Check that the bus connector is correctly inserted. • Check if the bus cable to the DP master is interrupted. • Switch the On / Off switch for 24 VDC on the power supply module off and on again.
*	Flashes	*	Off	On	No data exchange is taking place between DP master and IM 153-2.	• Check the configuration. • Check the PROFIBUS address.
On	Off	Off	Off	On	In non-redundant mode: All slaves are exchanging data. At least one slave has reported an error. or Inadmissible PROFIBUS address	Evaluate the diagnosis of the IM 153-2 and control the reported slaves. DP/PA link only: Check the status bytes in the slave user data. Read the slave device status using a configuration tool, for example *SIMATIC PDM*). or Set a valid PROFIBUS address for the IM 153-2.

SF	SF	Group error (red)
BF 1	BF 1	Bus fault in higher level PROFIBUS DP (red)
BF 2	BF 2	Bus fault in underlying PROFIBUS (red)
ACT	ACT	IM 153-2 has an active channel (yellow)
ON	ON	24V power supply IM 153-2 (green)

LEDs					Meaning	Remedy
SF	BF 1	BF 2	ACT	On		
					In the redundant mode: the IM 153-2 is passive and ready for switchover. There is an error on the active IM 153-2.	Evaluate the LED display on the active IM 153-2.
On	Off	Off	On	On	In the redundant mode: The IM 153-2 is active. All slaves are exchanging data. At least one slave has reported an error.	Evaluate the diagnosis of the IM 153-2 and control the reported slaves. Evaluate the diagnoses of the underlying slaves using the online view of HW Config. DP/PA link only: Check the status bytes in the slave user data. Read the slave device status using a configuration tool, for example *SIMATIC PDM*).
On	Off	Flashes	*	On	The configured structure of the link does not correspond to the actual structure. or The IM 153-2 has no cyclical data exchange to at least one configured slave.	Check the configuration and structure of the link. or Evaluate the diagnosis of the IM 153-2 and control the reported slaves (connection, address, parameterization, configuration).
Flashes	Flashes	Flashes	Flashes	Flashes	In the current mode the IM 153-2 is not compatible with the redundant IM 153-2.	You will find information on compatibilitiy between the versions of IM 153-2 and IM 157 in the chapter *Compatibility to precursor modules*.

* Not relevant

** After the transition to the redundant system state the "SF" LED flashes for another 20 seconds.

See also

Compatibility of the IM 153-2 (Page 2-13)

12.1.2 LED displays of the DP/PA coupler FDC 157-0

Status and error messages of the DP/PA coupler FDC 157-0

Table 12-2 Status and error messages of the DP/PA coupler FDC 157-0

SF	Group fault (red)
BF	Bus fault (red)
DP	PROFIBUS DP bus monitoring (yellow)
PA	PROFIBUS PA bus monitoring (yellow)
ACT	DP/PA coupler activated, energizing/conducting (yellow) - only for PA redundancy
ON	24 V power supply DP/PA coupler (green)

LEDs						Meaning	Remedy
SF	BF	DP	PA	ACT	ON		
*	*	*	*	*	On	Voltage is applied to the DP/PA coupler. The DP/PA coupler is ready to operate.	-
Off	Off	*	*	Off	On	DP/PA coupler without diagnostic message	-
On	Off	*	*	Off	On	DP/PA coupler with diagnostic message	-
*	*	*	*	Off	Off	• There is no voltage applied to the DP/PA coupler. • Error in the DP/PA coupler.	• Check the 24 V voltage supply of the DP/PA coupler, • Contact your Siemens representative.
*	*	*	*	*	Flashes	PROFIBUS PA overloaded	Check the number of connected PA field devices and the total current.
*	Flashes	*	*	*	On	DP/PA coupler not or not correctly configured. Causes: • PROFIBUS addresses do not match in the configuration and on the DP/PA coupler. • Redundancy mode	Check the PROFIBUS addresses in the configuration and on the DP/PA coupler.
*	On	Off	Off	*	On	PROFIBUS DP frames are not being received. Causes: • The DP master is not in operation. • Bus cable is damaged. • Bus modules are not connected correctly. • Connector to backplane bus is defective.	• Check that the bus connector is correctly inserted. • Check whether the bus cable to the DP master is defective. • Check if the bus modules are correctly connected. • Check the 24 V voltage supply of the DP/PA coupler.
Off	Off	On	Flashes	on	On	PROFIBUS PA frames are being received	-

SF	Group fault (red)
BF	Bus fault (red)
DP	PROFIBUS DP bus monitoring (yellow)
PA	PROFIBUS PA bus monitoring (yellow)
ACT	DP/PA coupler activated, energizing/conducting (yellow) - only for PA redundancy
ON	24 V power supply DP/PA coupler (green)

LEDs						Meaning	Remedy
SF	BF	DP	PA	ACT	ON		
On	Off	On	Off	On	On	PROFIBUS PA frames are not being received, for example • The voltage to PROFIBUS PA is not within the permissible range (short circuit, overload). • No response from a PA field device. The PA field device is possibly not being addressed.	• Check the PA field devices on the PROFIBUS PA • Check if the bus segments are terminated properly.
Off	On	*	*	*	On	• No DP master available. • Diagnostics not available / not possible • Illegal PROFIBUS addresses of the DP/PA coupler	Check the PROFIBUS addresses of the DP/PA coupler.
*	*	*	*	On	*	DP/PA coupler is the active energizing coupler. **	

* Not applicable

** If the ACT LED it illuminated for both DP/PA couplers, then both DP/PA couplers are active: one DP/PA coupler powers its equipotential bonding line, the other passes through.

12.1.3 LED displays of the DP/PA coupler

Status and error messages of the DP/PA coupler

Table 12-3 Status and error messages of the DP/PA coupler

DP	DP	PROFIBUS DP bus monitoring (yellow)
PA	PA	PROFIBUS PA bus monitoring (yellow)
ON	ON	24V power supply DP/PA coupler (green)

LEDs			Meaning	Remedy
DP	PA	ON		
*	*	On	Voltage is applied to the DP/PA coupler The DP/PA coupler is ready to operate.	-
*	*	Off	There is no voltage applied to the DP/PA coupler, or Error in the DP/PA coupler.	Check the 24 V voltage supply of the DP/PA coupler, or Contact your Siemens representative
*	*	Flashes	PROFIBUS PA overloaded	Check the number of connected PA field devices and the total current.
Flashes	*	On	PROFIBUS DP frames are being received	-
Off	*	On	PROFIBUS DP frames are not being received Causes: • The DP master is not in operation. • Bus cable is damaged. • Bus modules are not connected correctly. • Connector to backplane bus is defective	• Check that the bus connector is correctly inserted. • Check if the bus cable to the DP master is interrupted. • Check if the bus modules are correctly connected. • Check the 24 V voltage supply of the DP/PA coupler,
*	Flashes	On	PROFIBUS PA frames are being received	-
*	Off	On	PROFIBUS PA frames are not being received, for example • the voltage to PROFIBUS PA is not within the permissible range (short circuit, overload). • No response from a PA field device. The PA field device is possibly not being addressed.	• Check the PA field devices on the PROFIBUS PA • Check if the bus segments are terminated properly.

* Not relevant

12.1.4 LED displays of the Y coupler

Status and error messages of the Y coupler

Table 12-4 Status messages of the Y coupler

DP 1 Bus monitoring of the internal PROFIBUS DP (yellow)
DP 2 Bus monitoring of the underlying PROFIBUS DP (yellow)
ON 24V power supply for Y coupler (green)

LEDs			Meaning	Remedy
DP 1	DP 2	ON		
Off	Off	Off	No voltage is applied to the Y coupler	Switch on the power supply of the IM 153-2. If the LED ON does not light up when the power supply of the IM 153-2 is switched on: Replace IM 153-2 because the internal power supply is defective.
Off	Off	On	Voltage is applied to the Y coupler The Y coupler is ready to operate. No data exchange is taking place between the internal and the underlying DP master system.	• Check that the bus connector is correctly inserted. • Check if the bus cable to the underlying DP master system is interrupted. • Check if the bus modules are correctly connected.
On	Off	On	Frames from the underlying DP master system are not being received, for example: • The connection to the underlying DP master system is interrupted. • DP slaves are not responding.	• Check whether the underlying DP master system is connected correctly (the bus connector is plugged in and the two bus terminal resistors are connected in if necessary). • Check the connected DP slaves
*	On	On	Data exchange taking place between internal and underlying DP master system (at high transmission speed).	-
On	*	On		
*	Flashes	On	Data exchange is taking place between internal and underlying DP master system (at low transmission speed).	-
Flashes	*			

* Not relevant

12.1.5 LED displays of the AFD

Status and field messages from the AFD

Table 12-5 Status and field messages from the AFD

PA1		X1 X2 X3 X4		PA2	
LEDs			Meaning	Remedy
PA1 / PA2		X1 … X4		
Off	green		PA main line has no faults.	-
red	Off		Automatic bus terminator active cause: short-circuit or no-load operation on the respective segment of the PA main line (PA1 or PA2)	Eliminate the fault cause.
Off	Off		Wires of a PA main line swapped	Correct the wiring.
		Off	No field device is connected to the respective spur line.	-
		green	Field device is connected.	-
		Flashes	Short-circuit on the PA spur line	Eliminate the fault cause.

12.1.6 LED displays of the active field splitter (AFS)

Status and field messages from the active field splitter (AFS)

Table 12-6 Status and field messages from the active field splitter (AFS)

PA1		PA2	
LEDs		Meaning	Remedy
PA1 / PA2			
Off	green	PA main line has no faults.	-
red	Off	Short-circuit or no-load operation on the PA main line to a DP/PA coupler	Eliminate the fault cause.
Off	Off	Wires of a PA main line swapped	Correct the wiring.

12.2 Diagnostics with STEP 7: IM 153-2

Terminology conventions

Some of the following information applies to both the DP/PA link with its PA field devices and to the Y link with its underlying DP slaves. In such instances, the following terminology will be used for the sake of clarity:

- "Link" stands for DP/PA Link and Y Link
- "Slaves" stands for PA field devices and underlying DP slaves.
- "Underlying master system" stands for PA master system and underlying DP master system.

Slave diagnostics

Slave diagnostics are performed in accordance with IEC 61784-1:2002 Ed1 CP 3/1. Depending on the DP master,they can be read out with *STEP 7*, *SIMATIC PDM* or other configuration tools.

With *STEP 7* the diagnostic frames of the underlying DP slaves can be displayed in the online view of HW Config.

Additional information

For additional information, please refer to the *STEP 7* online help topic "How to diagnose hardware"

Please refer to the *SIMATIC Software; Programming with STEP 7 V5.x*. manual for further options for reading out diagnostic information.

You will find the manual on the Internet at:

http://support.automation.siemens.com

Search for the entry with the number 18652056.

12.2.1 Structure of slave diagnostics

Influencing factors

The structure of the slave diagnostics depends on whether the IM 153-2 is working in S7 standard mode, redundancy mode on an S7-400H or in DP standard master mode.

Diagnostic blocks in S7 standard mode and in the redundancy mode

The table below shows the lengths of the diagnostics blocks and the offset in the diagnostic frame.

Table 12-7 Length and offset of the diagnostic blocks in S7 standard mode and in redundancy mode

Diagnostic block	Length in bytes	Offset in the non-redundancy mode	Offset in the redundancy mode
Default diagnosis	6	0	0
Identifier-related diagnostics	31	6	6
Module status	63	37	37
Status message	60	100	100
H-status	8	-	160
Interrupt section	(max. 63 *)	(160 *)	(168 *)
Total length		160 (max. 223 *)	168 (max. 231 *)
* only if interrupts are reported			

Diagnostic blocks in DP standard master mode

When configuring the IM 153-2 via GSD file with Revision 4 and later, each diagnostic block (with the exception of the default diagnosis) can be chosen to be available or not. The sequence of the diagnostic blocks is fixed. The offset of the individual diagnostic blocks in the diagnostic frame depend on which diagnostic blocks are selected.

The table below shows the lengths of the diagnostics blocks and examples of the offset in the diagnostic frame with specific configurations.

Table 12-8 Length and offset of the diagnostic blocks in DP standard master mode

Diagnostic block	Length in bytes	Example 1		Example 2	
		Selected	Offset	Selected	Offset
Default diagnosis	6	Always	0	Always	0
Identifier-related diagnostics	31	X	6	-	-
Module status	63	X	37	X	6
Status message	60	-	-	-	-
Interrupt section	(max. 63 *)	-	-	X	(69 *)
Total length	160 (max. 223 *)	100		69 (max. 132 *)	
* only if interrupts are reported					

12.2.2 Reading out the diagnostics of underlying slaves

Introduction

The diagnostic data of the underlying diagnostics-capable slaves buffered in the IM 153-2 can be read via the SFC 59 "RD_REC".

Requirements

The link must be operated on a DPV1 master.

Parameters for SFC 59 "RD_REC"

The following table provides you with the necessary values for call parameters of the SFC 59 "RD_REC".

Table 12-9 Call parameters for SFC 59 "RD_REC"

Parameters	Value, meaning
IOID	B#16#54 (I/O input IOI)
LADDR	Diagnostic address of the IM 153-2 from HW Config
RECNUM	Node number of the slave, whose diagnosis is to be read

The possible fault information in the return value RET_VAL is listed in the chapter *Reading and writing records*.

12.2.3 Structure of the diagnostic blocks

12.2.3.1 Default diagnostics

Structure of the default diagnosis

The default diagnosis consists of 6 bytes and is subdivided as follows:

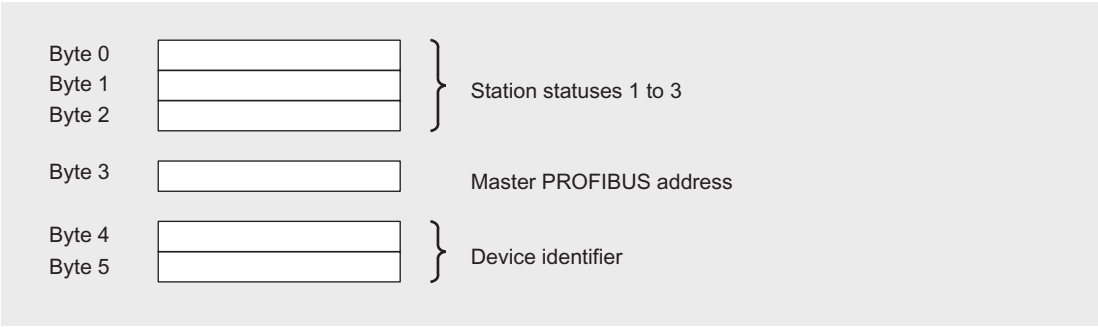

Figure 12-1 Structure of the default diagnosis

Station statuses 1 to 3

Station status 1 to 3 provides an overview of the state of the IM 153-2.

Table 12-10 Structure of station status 1

Bit	Meaning	Cause / remedy
0	1: The IM 153-2 cannot be addressed by the DP master.	• Is the correct PROFIBUS address set on the IM 153-2? • Is the bus connector connected? • Voltage on the IM 153-2?
1	1: The IM 153-2 is not ready for data exchange.	• Wait, because IM 153-2 is just starting.
2	1: The configuration data that the DP master has sent to the IM 153-2 do not match the structure of the IM 153-2.	• Have you entered the right station type or right IM 153-2 structure into the configuration software?
3	1: External diagnostics available. (Group diagnostic display)	• Evaluate the identifier-related diagnosis, the module status and / or the status message. As soon as all errors have been eliminated, bit 3 is reset. The bit is set again when there is a new diagnostic message in the bytes of the aforementioned diagnostics.
4	1: The required function is not supported by the IM 153-2.	• Check the configuration.
5	1: DP master cannot interpret the response from the IM 153-2.	• Check the bus configuration.
6	1: The station type configured does not correspond to the IM 153-2.	• Correct station type entered in the configuration software?
7	1: The IM 153-2 was parameterized by a different DP master (not by the DP master that has access to the IM 153-2 at the moment).	• Bit is always set to "1" when you are accessing the IM 153-2 using a PD or a different DP master. The PROFIBUS address of the DP master that parameterized the IM 153-2 is to be found in the "Master-PROFIBUS-address" diagnostic byte.

Table 12-11 Structure of station status 2

Bit	Meaning
0	1: The IM 153-2 must be parameterized again.
1	0: Bit is always set to "0".
2	1: The bit is always set to "1" if the IM 153-2 with this PROFIBUS address is present.
3	1: The response monitor is enabled for IM 153-2.
4	0: Bit is always set to "0".
5	0: Bit is always set to "0".
6	0: Bit is always set to "0".
7	1: The IM 153-2 is disabled; this means that it is detached from current processing.

Table 12-12 Structure of station status 3

Bit	Meaning
0 to 7	0: Bits are always set to "0".

Master PROFIBUS address

The PROFIBUS address of the specific DP master that parameterized the IM 153-2 and that has reading and writing access to the IM 153-2 is stored in byte 3 of the default diagnosis.

Device identifier

The device identifier is a code that uniquely identifies the DP slave (PROFIBUS ID number).

Table 12-13 Structure of the device identifier

Byte 4	Byte 5	Designation
80_H	52_H	IM 153-2

12.2.3.2 Identifier-related diagnostics

Definition

The identifier-related diagnosis specifies for which slots of the IM 153-2 a diagnosis is available.

Terms: slave, module and slot

A slave is a bus node that is accessed via its own PROFIBUS address. It can physically or logically consist of one or more modules. The slaves and their modules are depicted in the identifier-related diagnosis in virtual slots:

- A non-modular slave always occupies two slots.
  The first slot represents a "virtual header module" and the second a "virtual module".
- A modular slave consisting of x modules occupies (x+1) slots.
  The first slot is assigned to the header module, the subsequent slots are assigned to the individual modules in ascending order.

Example of slot assignment

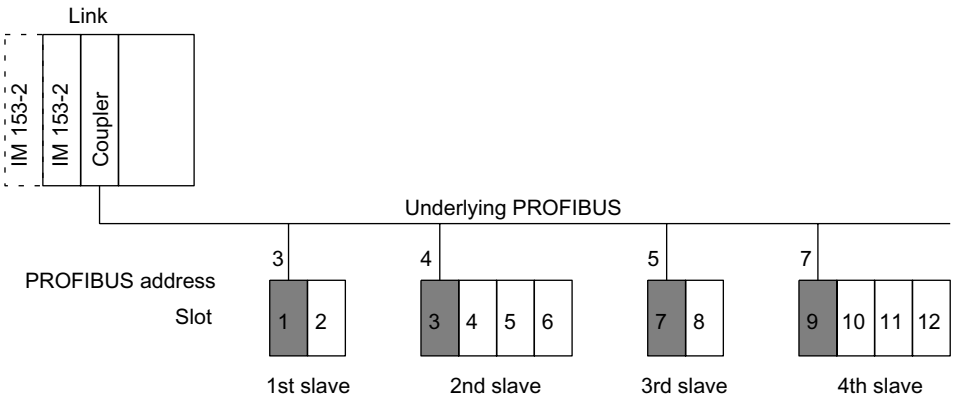

Figure 12-2 Example of slot assignment

Structure of the identifier-related diagnostics

The identifier-related diagnosis comprises 31 bytes.

Each slot of a slave is occupied by one bit. The slaves are arranged in ascending order according to their PROFIBUS addresses.

One bit is set:

- if the associated slave for the slot concerned delivers an identifier-related diagnosis, or
- if the associated configured slave is not exchanging data with the DP master.

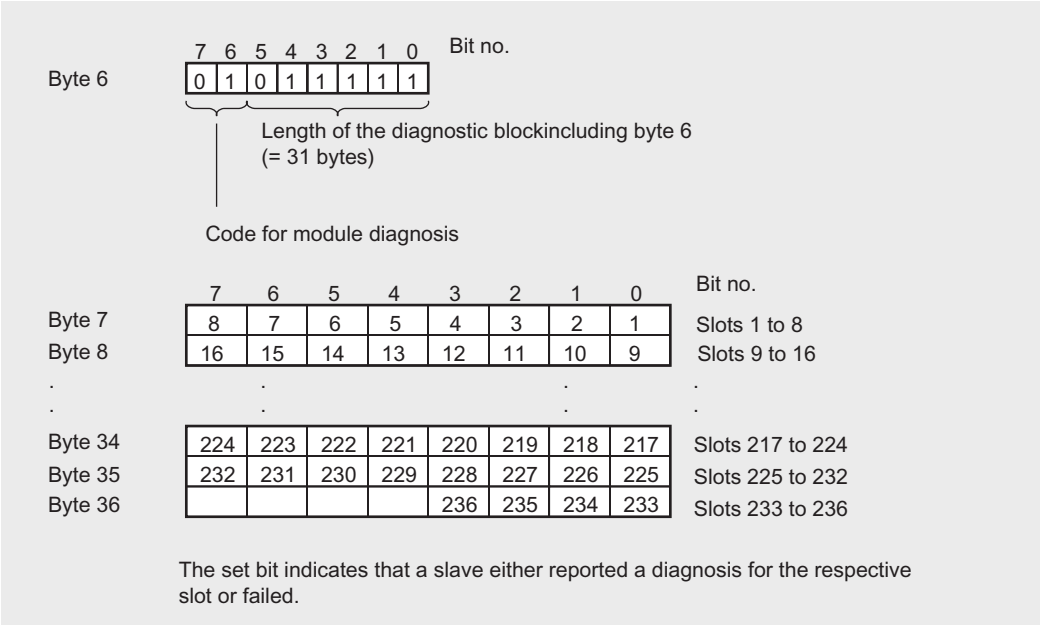

Figure 12-3 Structure of the identifier-related diagnostics

12.2.3.3 Module status

Definition

The module status is part of the device-related diagnostics and reports the status of the configure modules.

Structure of the module status

The modules status comprises 63 bytes.

The start address x is the equal to 37 for the S7 standard mode and redundant mode, in DP standard master mode it depends on the diagnostic blocks that are present.

The status of each slot is coded by 2 bits in the module status.

The following applies to the entry in the module status:

- If an underlying slave delivers its own module status in its diagnostics, this status is copied to the appropriate location.
- If an underlying slave delivers an identifier-related diagnosis but no module status, the status 01_B "Module error" is entered for an incorrect identification.
- If an underlying slave delivers neither its own module status nor an identifier-related diagnosis, the status is entered as follows:
  - In case of faultless operation: 00_B "Module OK"
  - In case of configuration errors: 10_B "Wrong module"
  - If a slave is missing 11_B "No module"
  - In case of other errors (for example "Prm_Fault"): 01_B "Module fault"

	7	6	5	4	3	2	1	0	Bit no.
Byte x	0	0	1	1	1	1	1	1	

Length of the diagnostic block including byte x
(= 63 bytes)

Code for station diagnosis

Byte x+1	82_H	Status type: module status
Byte x+2		Not applicable
Byte x+3		Not applicable

	7	6	5	4	3	2	1	0	Bit no.
Byte x+4	4		3		2		1		Modules 1 to 4
Byte x+5	8		7		6		5		Modules 5 to 8
.	.						.		.
.	.						.		.
.	.						.		.
Byte x+59	224		223		222		221		Modules 221 to 224
Byte x+60	228		227		226		225		Modules 225 to 228
Byte x+61	232		231		230		229		Modules 229 to 232
Byte x+62	236		235		234		233		Modules 233 to 236

The status is encoded by means of two bits for each slot.
00_B: “Module OK", valid user data
01_B: “Module faulty", user data invalid
10_B: “Incorrect module", user data invalid
11_B: “No module", user data invalid
Slot 1 is assigned to the first configured slave.

Figure 12-4 Structure of the module status

See also

Structure of slave diagnostics (Page 12-10)

12.2.3.4 Status message

Definition

The status message is part of the device-related diagnostics and delivers, among other things, the following information:

- Underlying slaves that have reported diagnostics
- Underlying slaves that are exchanging data
- State of the IM 153-2 as master of the underlying PROFIBUS

Structure of the status message

The status message comprises 60 bytes.

The start address x is equal to 100 for the S7 standard mode and redundant mode, in DP standard master mode it depends on the diagnostic blocks that are present.

	7	6	5	4	3	2	1	0	Bit no.
Byte x	0	0	1	1	1	1	0	0	

Length of the diagnostic block including byte x (= 60 bytes)

Code for station diagnosis

Byte x+1	81_H	Status type: status message
Byte x+2		Not applicable
Byte x+3		Not applicable

Slaves that have reported diagnosis

	7	6	5	4	3	2	1	0	Bit no.
Byte x+4	7	6	5	4	3	-	-	-	Addresses 3 to 7
Byte x+5	15	14	13	12	11	10	9	8	Addresses 8 to 15
.	.							.	.
.	.							.	.
Byte x+18	119	118	117	116	115	114	113	112	Addresses 112 to 119
Byte x+19	-	-	125	124	123	122	121	120	Addresses 120 to 125

If the bit is set, this indicates that the slave with the corresponding address reported a diagnosis.

Slaves that are engaged in data exchange with the IM 153-2

	7	6	5	4	3	2	1	0	Bit no.
Byte x+20	7	6	5	4	3	-	-	-	Addresses 3 to 7
Byte x+21	15	14	13	12	11	10	9	8	Addresses 8 to 15
.	.							.	.
.	.							.	.
Byte x+34	119	118	117	116	115	114	113	112	Addresses 112 to 119
Byte x+35	-	-	125	124	123	122	121	120	Addresses 120 to 125

If the bit is set, this indicates that the slave with the corresponding address is engaged in data exchange with the IM 153-2.

Continued overleaf

Figure 12-5 Structure of the status message

Continued from the previous page

Status of the IM 153-2

Byte x+36		Status of the IM 153-2, see table below
Byte x+37	82_H	Identifier
Byte x+38		Reserved
Byte x+39		Reserved
Byte x+40		Reserved
Byte x+41		Reserved
Byte x+42		Reserved

	7	6	5	4	3	2	1	0	Bit no.
Byte x+43	0	0	0	0					

1: Start-up delay enabled
0: At least one slave not is engaged in data exchange with the IM 153-2.
1: All slaves are engaged in data exchange with the IM 153-2

1: Missing or incorrect configuration
1: Invalid bus parameter for PROFIBUS-DP

Overview of channel diagnosis

	7	6	5	4	3	2	1	0	Bit no.
Byte x+44	7	6	5	4	3	-	-	-	Addresses 3 to 7
Byte x+45	15	14	13	12	11	10	9	8	Addresses 8 to 15
.	.							.	.
.	.							.	.
Byte x+58	119	118	117	116	115	114	113	112	Addresses 112 to 119
Byte x+59	-	-	125	124	123	122	121	120	Addresses 120 to 125

If a bit is set, this indicates that the slave with the corresponding address reported a channel-related diagnosis.

Figure 12-6 Structure of the status message, continuation

Table 12-14 The meaning of byte x+36 in der status message

Byte x+36	Status	Meaning
00_H	OFF	No data are exchanged between IM 153-2 and the underlying slaves. The IM 153-2 can neither receive nor pass on the token.
40_H	STOP	No data are exchanged between IM 153-2 and the underlying slaves. The IM 153-2 can receive and forward the token.
80_H	CLEAR	The IM 153-2 reads the input data cyclically. Output data are held in a safe state or set to "0". The IM 153-2 can receive and forward the token.
$C0_H$	RUN (OPERATE)	The IM 153-2 reads the input data cyclically and forwards the output data to the slaves. The IM 153-2 can receive and forward the token.

See also

Structure of slave diagnostics (Page 12-10)

12.2.3.5 H status

Definition

The IM 153-2 delivers the H status only

- if it is connected to the redundant DP system of an S7-400H or
- if it is operated redundantly according to the standard.

The H status gives information on the state of an active and passive IM 153-2. The H status consists of 8 bytes.

Structure of the H status

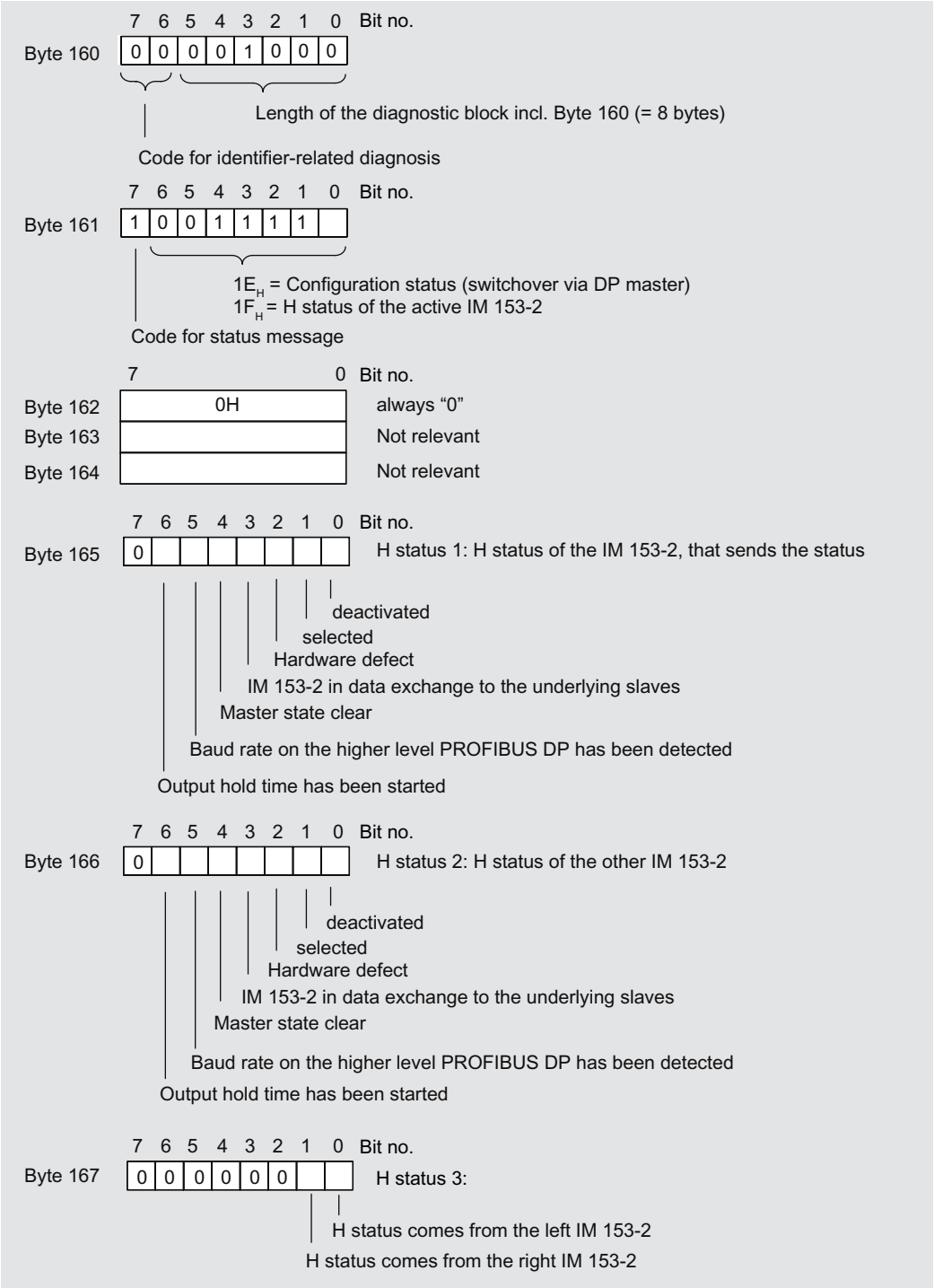

Figure 12-7 Structure of the H status of the IM 153-2 in redundant mode

12.2.3.6 Interrupts

Definition

The interrupt section provides information on the type of interrupt and the cause leading to the interrupt being triggered. The interrupt section is only transmitted if there is an interrupt.

Structure of the interrupt section

The structure of the interrupt section depends on the DP master on which the IM 153-2 is being operated:

- On a DPV1-capable DP master the interrupt section comprises at maximum 63 bytes
- On an S7 redundant master that is **not** DPV1-capable, the interrupt section comprises 20 bytes.

Structure of the interrupt section on redundant S7 masters that are not DPV1-capable.

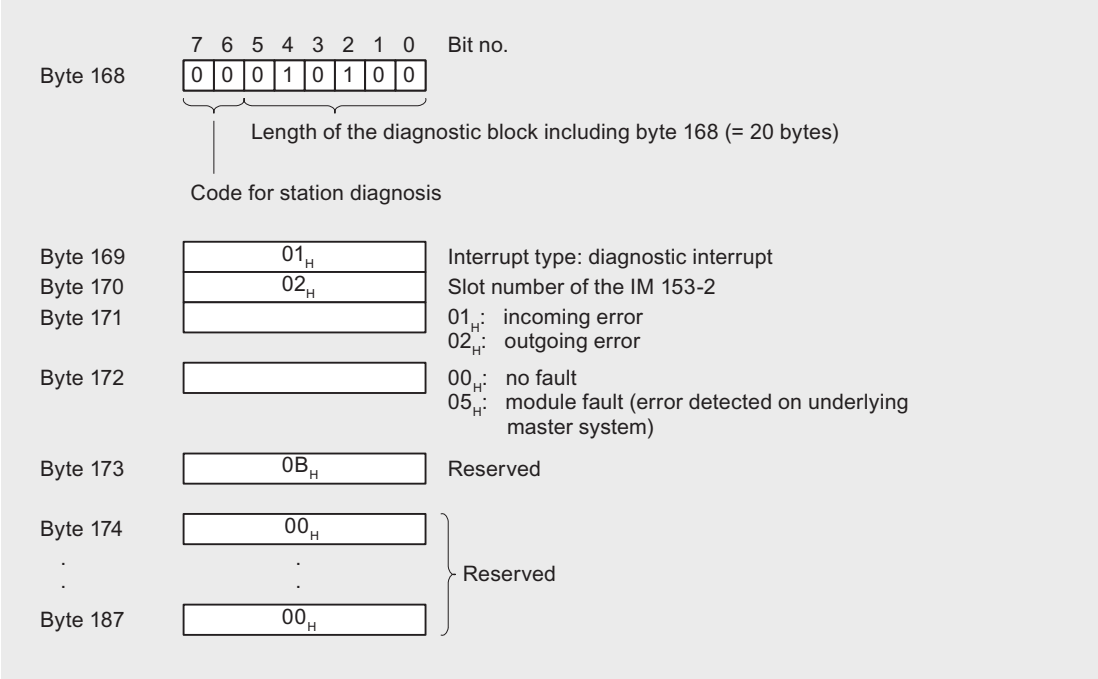

Figure 12-8 Structure of the interrupt section on redundant S7 masters that are not DPV1-capable.

Structure of the Interrupt Section on a DPV1-capable DP Master

The interrupt section consists of an interrupt header and the additional interrupt information. The interrupt header always comprises 4 bytes. The structure of the additional interrupt information depends on the interrupt type; its length is 59 bytes maximum.

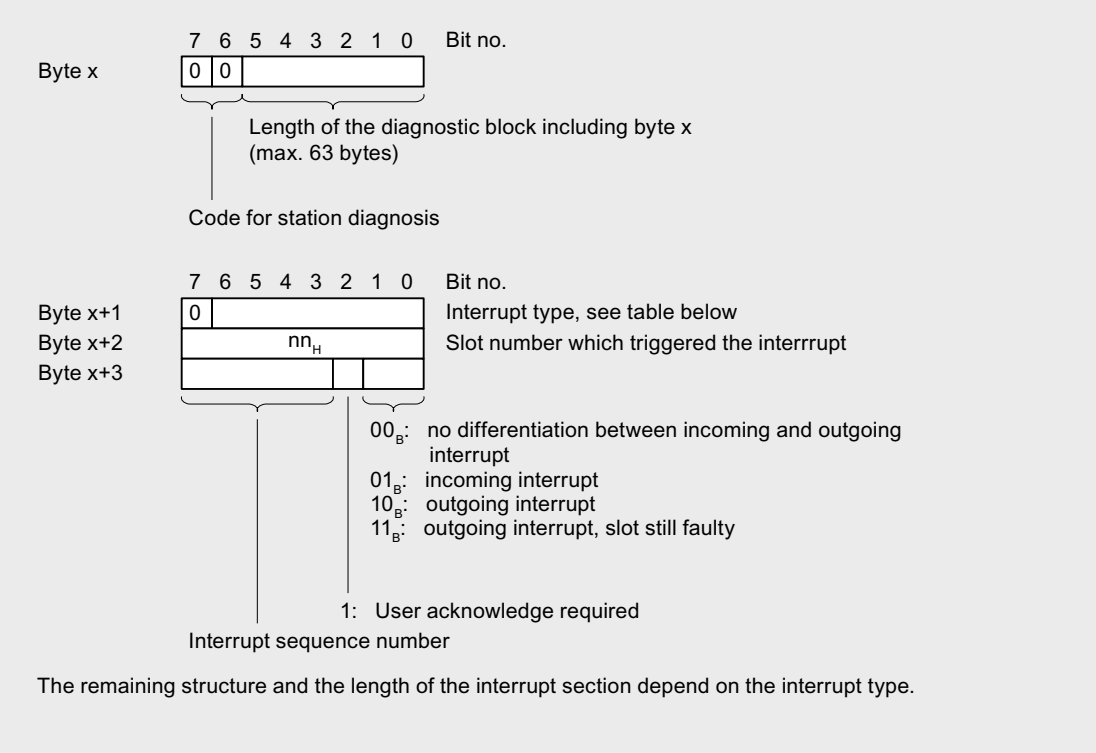

Figure 12-9 Structure of the interrupt headers on a DPV1-capable DP master

The start address x is equal to 168 in redundant mode and equal to 160 in DP standard master mode.

Interrupt type

Table 12-15 Interrupt type (bytes x+1 in the interrupt section)

Byte x+1	Interrupt type	Byte x+1	Interrupt type
00_H	Reserved	05_H	Status interrupt *
01_H	Diagnostic interrupt	06_H	Update interrupt *
02_H	Process interrupt *	07_H to $1F_H$	Reserved
03_H	Removal interrupt	20_H to $7E_H$	Manufacturer-specific interrupt *
04_H	Insertion interrupt	$7F_H$	Reserved
* These types of interrupts occur only if they are generated by an underlying DPV1 slave and are forwarded by the IM 153-2 (Interrupt routing, see below).			

Diagnostic interrupt

If a DPV0 slave or a non-interrupt-capable DPV1 slave on the underlying master system reports a diagnosis, the IM 153-2 initiates a diagnostic interrupt on the higher level DP master system ("proxy diagnostic interrupt").

The diagnostic frame of the slave is stored in the additional interrupt information. If this frame is longer than 59 bytes, the information exceeding the 60th byte is discarded. In addition to this, bit 7.(Ext_Diag_Overflow) is set in the third forwarded byte (byte x+6).

The diagnosis of an interrupt-capable DPV1 slave operated in DPV1 mode does not cause a diagnostic interrupt.

Removal / insert interrupt

When a slave on the underlying master system fails or is restored, the IM 153-2 initiates a remove or insert interrupt on the higher level DP master system.

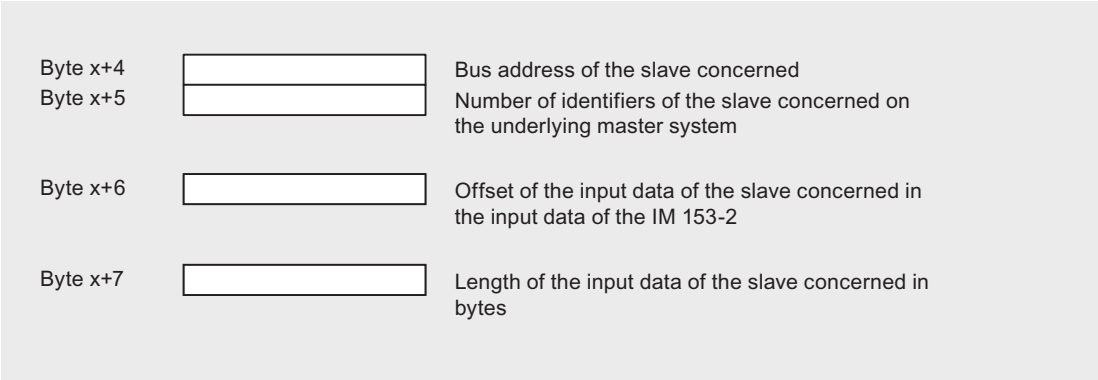

Figure 12-10 Structure of the additional interrupt information for remove / insert interrupts

The start address x is equal to 168 in redundant mode and equal to 160 in DP standard master mode.

In the case of modular slaves the additional interrupt information relates to the entire slave and not to the individual modules.

Remove / insert interrupts are only reported after the start-up delay is finished. Insert interrupts that occur up to then are fetched later.

Interrupt routing

When an interrupt-capable DPV1 slave on the underlying master system initiates an interrupt, the IM 153-2 forwards it to the higher level DP master system.

The interrupt header and additional interrupt information of the slave are stored in the interrupt section of the IM 153-2. With the exception of slot numbers and sequence numbers, this information remains unchanged.

12.2.4 Example of a diagnosis in redundant mode

Introduction

This example the call of a typical diagnosis of the active IM 153-2 in redundant mode.

12.2.4.1 Task specification

Assumption

The following assumptions apply to the example:

- The two IM 153-2 have the diagnostic address $3FE_H$.
- The underlying PROFIBUS master system consists of 4 configured slaves
- Slaves have the addresses: 4, 8, 12 and 20
- Structure of the slaves:
  - Salve 4 is a non-modular slave
  - Slave 8 consists of a header module and 6 modules
  - Slave 12 consists of a header module and 2 modules
  - Slave 20 consists of a header module and 3 modules
- All configure slaves are exchanging data with the active IM 153-2.
- Slave 8 reports the diagnosis:
  - Modules 1 and 3 report diagnoses
  - Module 1 reports a limit value violation
  - Module 3 reports an incorrect configuration

12.2.4.2 Solution with STEP 7

Call of SFC 13

Call the SFC 13 (DPNRM_DG) in the OB 1 and use it to read the diagnostic data from the IM 153-2.

Table 12-16 Call of the SFC 13 (DPNRM_DG) in the OB 1

STL

```
CALL SFC 13                                //Request to read the diagnostic data
 REQ :=TRUE                                //Diagnostic address of the IM 153-2
 LADDR :=W#16#3FE                          //RET_VAL of SFC 13
 RET_VAL :=MW0                             //Data mailbox for the diagnosis in the DB 10
 RECORD :=P#DB10.DBX 0.0 BYTE 190          //Reading operation runs through several OB 1 cycles
 BUSY :=M2.0
```

With this call, the diagnostic data are stored in DB 10.

Appearance of DB 10

Create the following structure for DB 10:

Address	Name	Type	Initial value	Comment
0.0		STRUCT		
+0.0	Norm_Diag	ARRAY[1..6]		Standard diagnosis
*1.0		BYTE		
+6.0	Kenn_Diag	ARRAY[1..31]		Identifier-related diagnostics
*1.0		BYTE		
+38.0	Modul_Diag	ARRAY[1..63]		Module status
*1.0		BYTE		
+102.0	Status_Message	ARRAY[1..60]		Status message
*1.0		BYTE		
+162.0	H_Status	ARRAY[1..8]		H status
*1.0		BYTE		
+170.0	Interrupt section	ARRAY[1..20]		Interrupts
*1.0		BYTE		
=190.0		END_STRUCT		

12.2.4.3 Evaluating the diagnostics data

Diagnostic data in DB 10

The relevant diagnostic data in DB 10 have the following meaning:

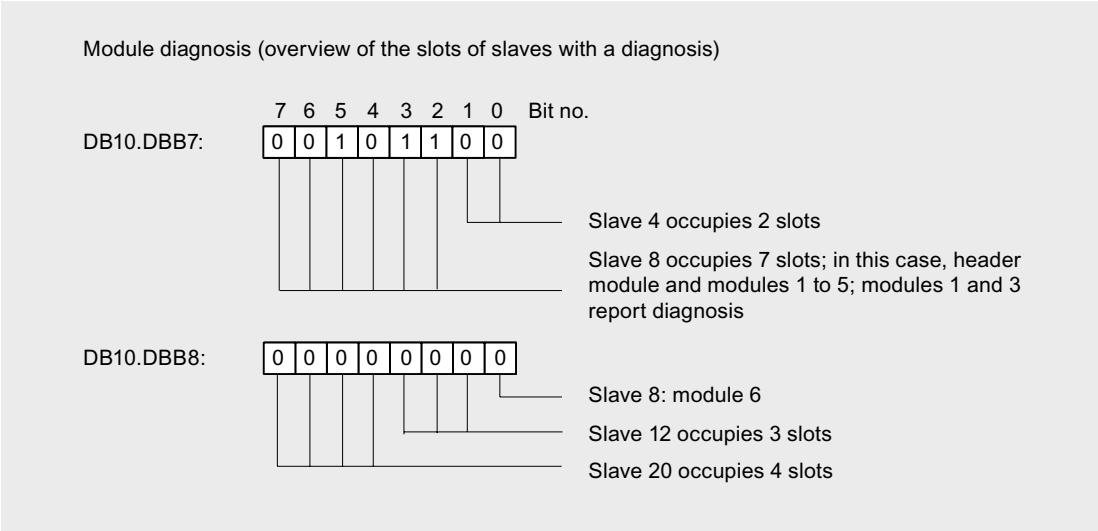

What is the status of the configured slots (modules)?

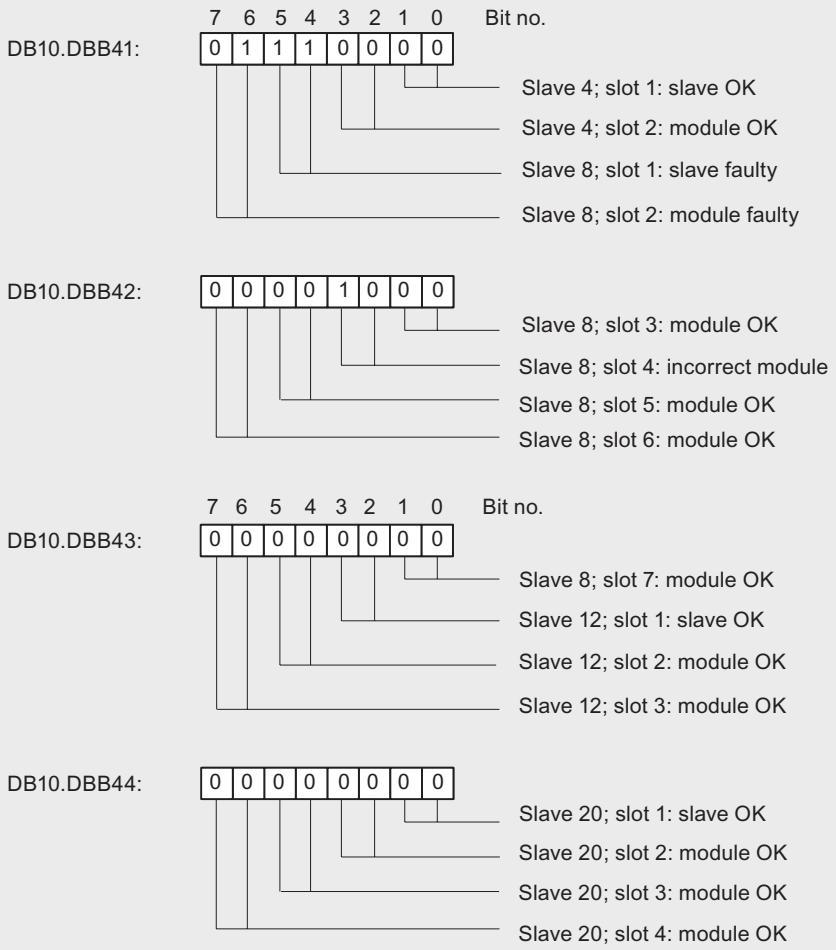

Which slaves are reporting a diagnosis?

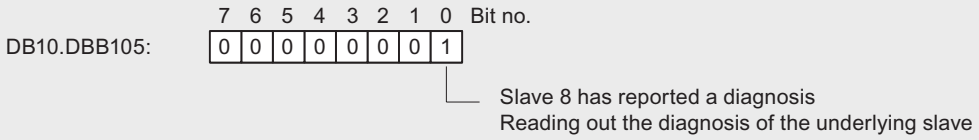

Which configured slaves are involved in data exchange with the DP master?

DB10.DBB120:	0	0	0	1	0	0	0	0
DB10.DBB121:	0	0	0	1	0	0	0	1
DB10.DBB122:	0	0	0	1	0	0	0	0

Slave 4 is engaged in data exchange with IM 153-2

Slave 8 is engaged in data exchange with IM 153-2

Slave 12 is engaged in data exchange with IM 153-2

Slave 20 is engaged in data exchange with IM 153-2

What status does the DP master have?

DB10.DBB136:	1	0	0	0	0	0	0	0	The IM 153-2 (DP master) is in RUN (OPERATE) mode
DB10.DBB137:	1	0	0	0	0	0	1	0	Identifier for the configured order number 82BCD
DB10.DBB138:	0	0	0	0	0	0	0	0	Reserved
DB10.DBB139:	0	0	0	0	0	0	0	0	Reserved
DB10.DBB140:	0	0	0	0	0	0	0	0	Reserved
DB10.DBB141:	0	0	1	1	0	0	0	0	IM 153-2 hardware version
DB10.DBB142:	0	1	0	0	0	0	0	0	IM 153-2 firmware version

What status does the underlying DP master system have?

DB10.DBB143:	0	0	0	0	0	0	1	0

Power-up of PROFIBUS DP is completed

All slaves are engaged in data exchange with the IM 153-2

Which slaves are reporting a channel-related diagnosis?

		6	5	4	3	2	1	0	Bit no.
DB10.DBB145:		0	0	0	0	0	0	1	

Slave 8 has reported a channel-related diagnosis

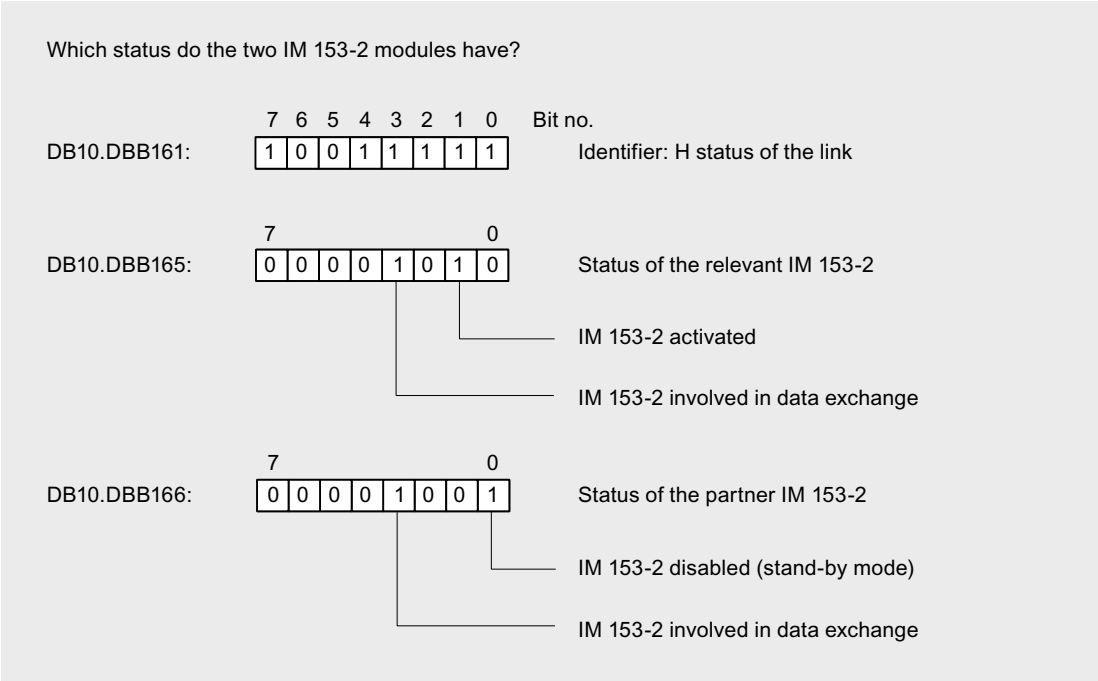

The SIMATIC H station always reads out only the active IM 153-2. Hence a change of active channel does not affect the H status.

12.3 Diagnostics with STEP 7: DP/PA coupler FDC 157-0

12.3.1 Structure of slave diagnostic data

Structure of slave diagnostic data

The figure below shows the structure of the slave diagnostics.

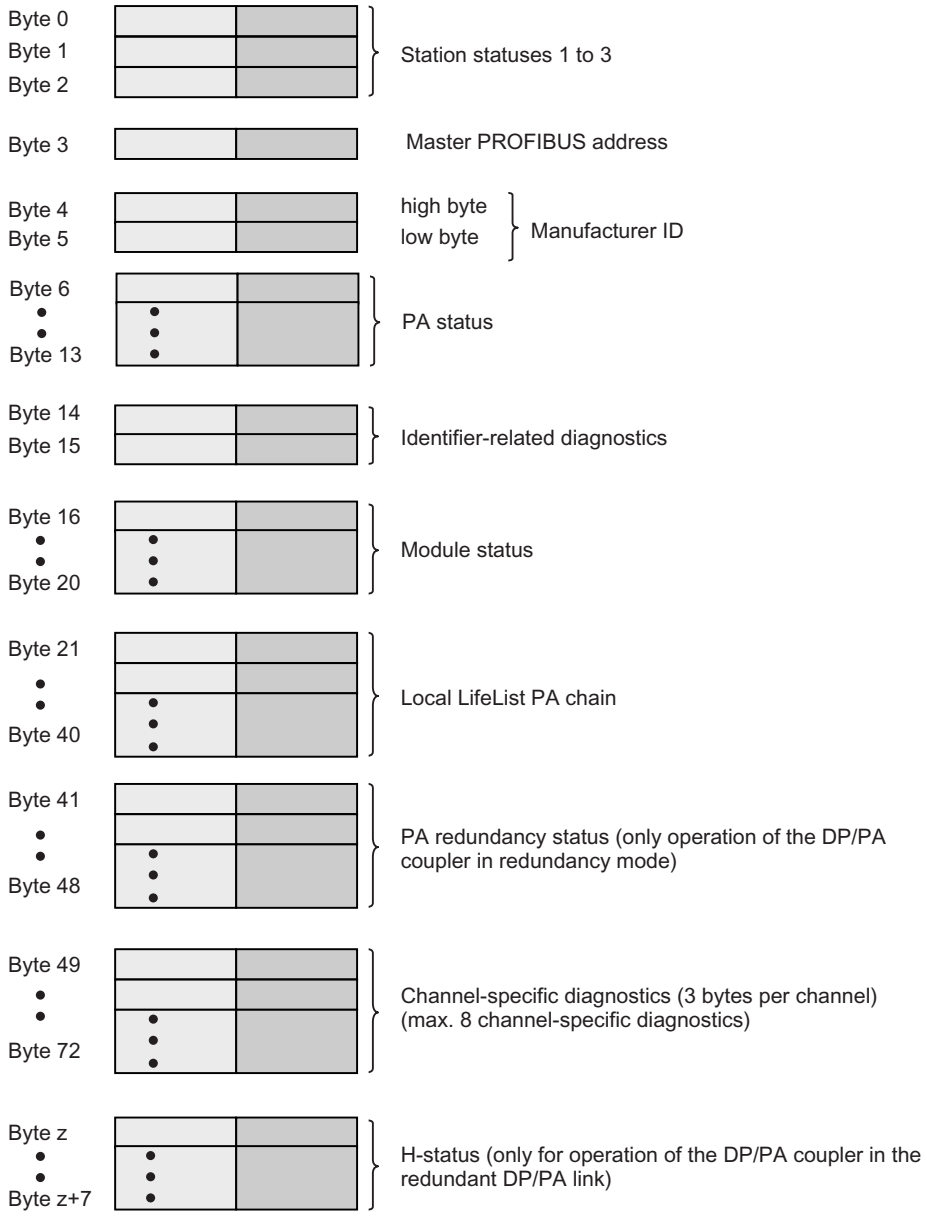

Figure 12-11 Structure of slave diagnostic data

Rule

When using the GSD file for configuration, you can disable or enable the following diagnostics:

- Module status; default setting: enable
- Channel-specific diagnostics; default setting: enable
- Local LifeList equipotential bonding line; default setting: disable

If you disable the diagnostics, they are removed from the diagnostics frame.

12.3.2 Structure of the diagnostic blocks

12.3.2.1 Station statuses 1 to 3

Definition

The stations status 1 to 3 provides an overview of the status of a DP slave.

Station Status 1

Table 12-17 Structure of station status 1 (Byte 0)

Bit	Meaning	Cause / Remedy
0	1: The DP slave cannot be addressed by the DP master. The bit on the DP slave is always "0".	• Is the correct PROFIBUS address set on the DP slave? • Check the bus connectors • Voltage at DP slave? • RS-485 repeater set correctly? • Has there been a RESET on the DP slave (off/on)?
1	1: The DP slave is not yet ready to exchange data.	• Wait for the DP slave to complete its startup.
2	1: The configuration data sent to the DP slave from the DP master does not match the configuration of the DP slave.	The DP slave is O.K., but the configuration does not match the current configuration of the DP slave. Compare the preset and actual configurations. Note: If the last slot is not used, install the slot cover. The cover is available in the bus termination module.
3	1: External diagnosis available.	Evaluate the channel-related diagnostic information, the module status and/or the channel-related diagnostic information. As soon as all errors have been eliminated, bit 3 will be reset. The bit is set again when there is a new diagnostic message in the bytes of the aforementioned diagnostics.

Bit	Meaning	Cause / Remedy
4	1: The DP slave does not supports the requested function (for example, changing the PROFIBUS address using the software).	Check the configuration.
5	1: The DP master cannot interpret the response from the DP slave.	Check the bus configuration.
6	1: Faulty DP parameter assignment message (wrong slave type, parameter).	Correct the preset and actual configurations.
7	1: The DP slave has not been parameterized by the DP master that currently has access to the DP slave.	The bit is always 1, for example, if you access the DP slave with the programming device or another DP master. The "master PROFIBUS address" diagnostic byte contains the PROFIBUS address of the DP master that assigned parameters to the DP slave.

Station Status 2

Table 12-18 Structure of station status 2 (Byte 1)

Bit	Meaning
0	1: The DP slave must be assigned new parameters.
1	1: There is a diagnostic message. The DP slave freezes its functions until the fault has been corrected (static diagnostic message).
2	1: The bit is always "1" at the DP slave.
3	1: Response monitoring is enabled for this DP slave.
4	1: The DP slave has received the "FREEZE" control command.
5	1: The DP slave has received a "SYNC" control command.*
6	0: The bit is always "0."
7	1: The bit is always "0." Note: When reading the station status from the DP master, the bit is 1 if the DP slave was deactivated in the DP master, i.e. it was isolated from the current process.

Station Status 3

Table 12-19 Structure of station status 3 (Byte 2)

Bit	Meaning
0 to 6	0: The bits are always "0."
7	1: There are more channel-related diagnostic messages than can be shown in the diagnostic frame

12.3.2.2 Master PROFIBUS address

Master PROFIBUS address

The diagnostic byte master PROFIBUS address contains the PROFIBUS address of the DP master:

- Assigned parameters to the DP slave and
- has read / write access to the DP slave

The master PROFIBUS address is in byte 3 of the slave diagnostic information.

12.3.2.3 Manufacturer ID

Definition

The manufacturer ID contains a code that describes the DP slave type.

Manufacturer ID

Byte 4	Byte 5	Description
81_H	31_H	DP/PA coupler with diagnostics functions

12.3.2.4 PA status

Setup of the PA status

The PA status for the DP/PA coupler is setup as follows:

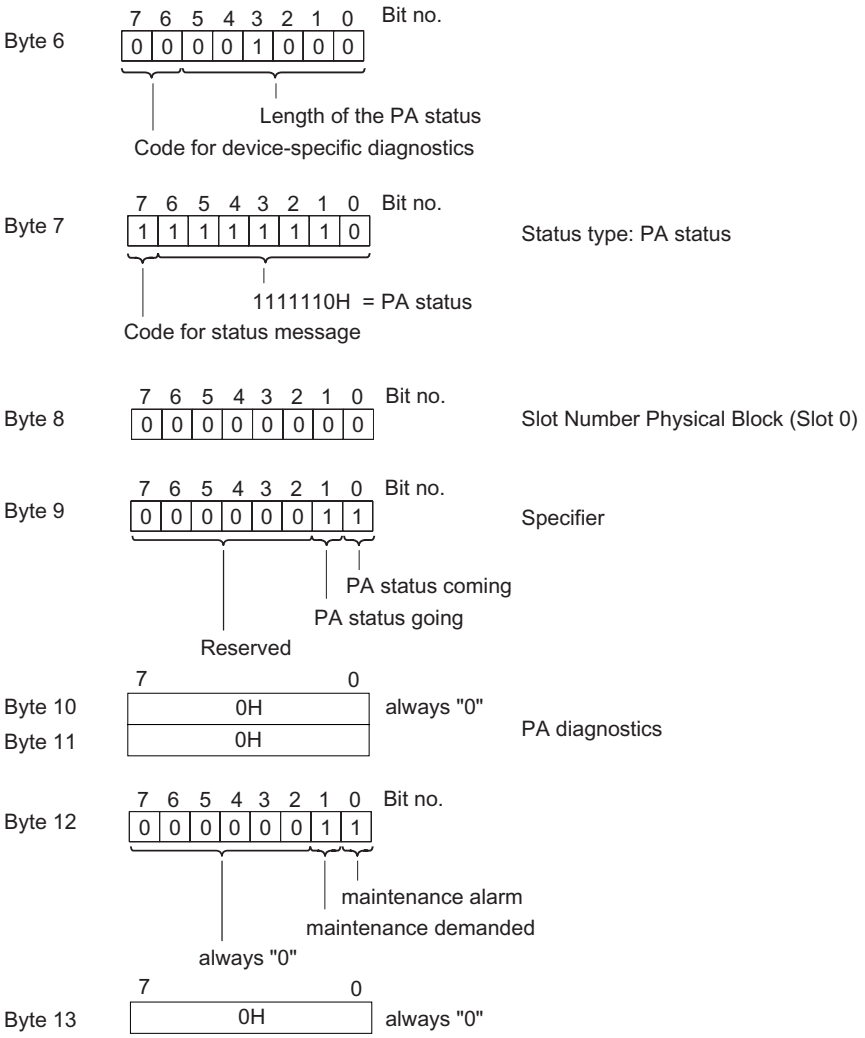

Figure 12-12 Setup of the PA status

Note

Maintenance alarm / maintenance demanded

The "maintenance alarm" or "maintenance demanded" bits are set according to the IEEE status byte.

See also

Structure of the current value and voltage value (Page 11-14)

12.3.2.5 Identifier-related diagnostics

Definition

The identifier-related diagnostic data states whether the DP/PA coupler reports an error or not. Identifier-related diagnostic data starts at byte 6 and is 2 bytes long.

Structure of the identifier-related diagnostics

The identifier-related diagnostic data for the DP/PA coupler is setup as follows:

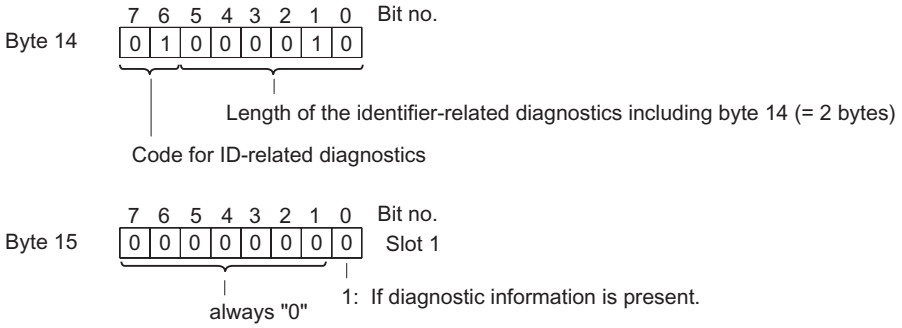

Figure 12-13 Structure of the identifier-related diagnostics

12.3.2.6 Module status

Definition

The module status indicates the status of the configured modules and expands on the module diagnosis as regards the configuration. The module status starts after the identifier-related diagnostic data and consists of 5 bytes.

Structure of the module status

The module status for the DP/PA coupler is setup as follows:

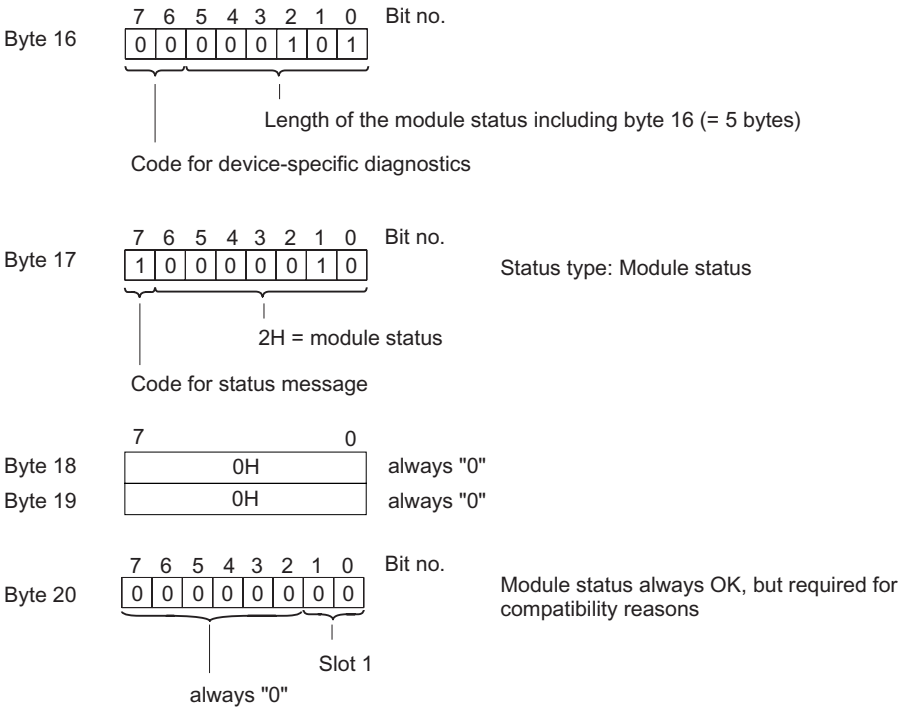

Figure 12-14 Structure of the module status

Rule

Note

Operation of the DP/PA coupler in the DP/PA link

To obtain the complete diagnostic information via the DP/PA link, you must enable the module status in the configuration when operating the DP/PA coupler in the DP/PA link.

12.3.2.7 Local LifeList

Definition

The local LifeList renders the status of the configured PA field devices on the equipotential bonding line. The local LifeList starts after the module status and consists of 20 bytes.

Structure of the local LifeList

The local LifeList of the DP/PA coupler is setup as follows:

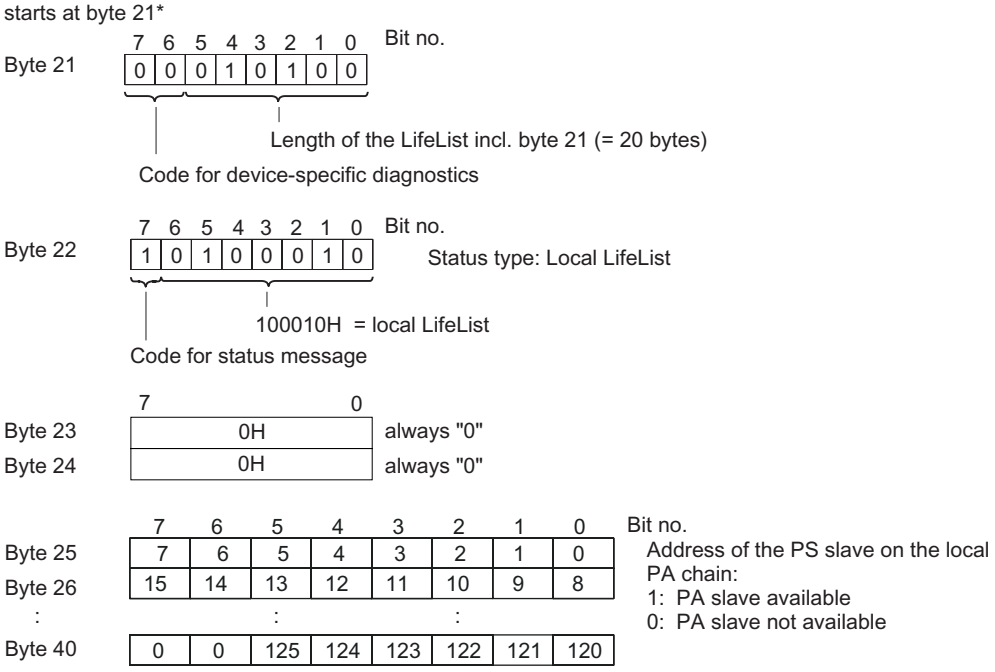

* without deselection of diagnostics in the configuration

Figure 12-15 Structure of the local LifeList

Reading the local LifeList

The local LifeList is disabled in the default setting of the configuration. To read it out, you must enable the "Local LifeList equipotential bonding line" parameter.

You can read the local LifeList in data record 50 of the DP/PA coupler.

See also

Structure of slave diagnostic data (Page 12-29)

12.3.2.8 PA redundancy status

Definition

The PA redundancy status renders the status of the configured DP/PA coupler. A prerequisite is the use of the BM FDC 157-0 bus module. The PA redundancy status consists of 8 bytes.

Setup of the PA redundancy status

The PA redundancy status for the DP/PA coupler is setup as follows:

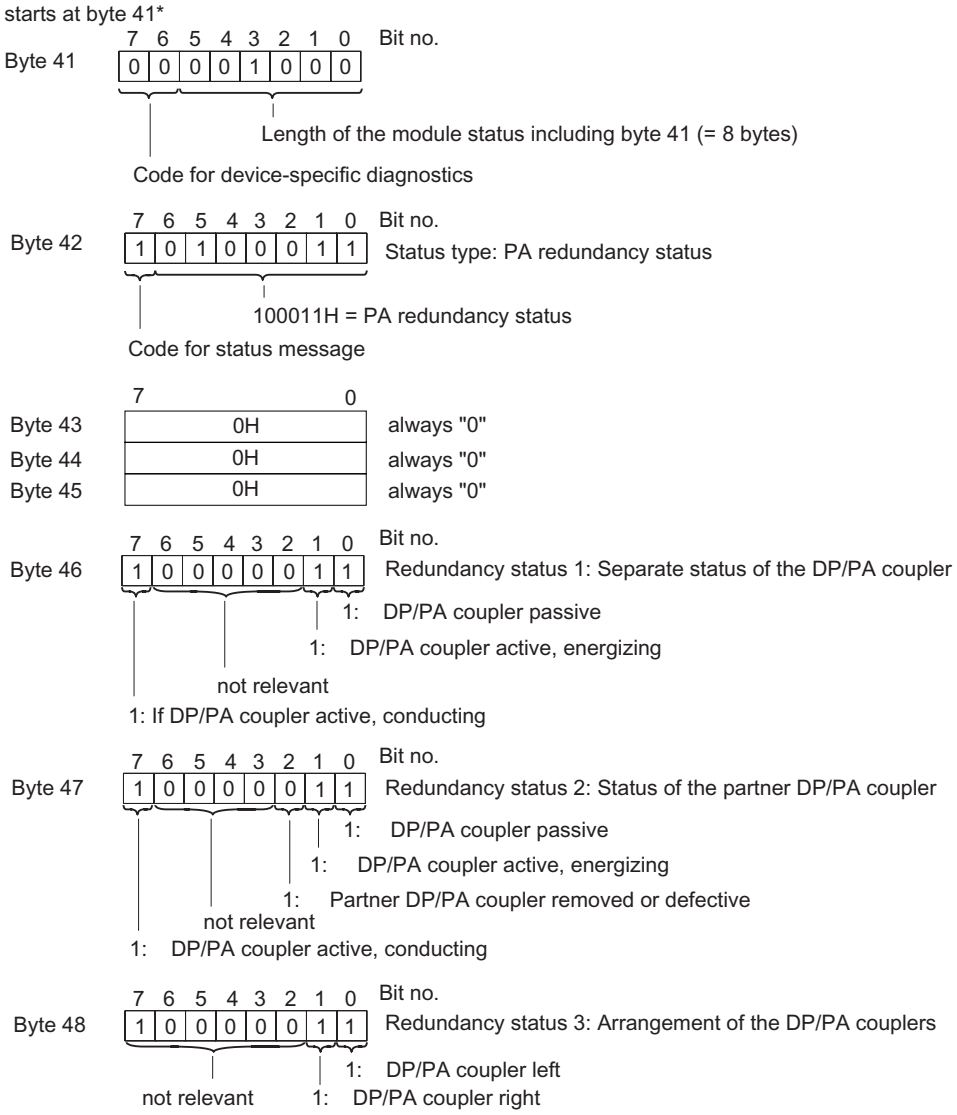

* without deselection of diagnostics in the configuration

Figure 12-16 Setup of the PA redundancy status

Reading out the PA redundancy status with data record 61

The PA redundancy status can also be read out with SIMATIC PDM. If the DP/PA coupler is not used redundantly, the redundancy status bytes 1 to 3 are "0".

12.3.2.9 Channel-specific diagnostics

Definition

Channel-specific diagnostics provides information about channel faults in modules. It represents the details of the identifier-related diagnostic data. For each channel-specific diagnostics, 3 bytes are added according to the IEC 61784-1:2002 Ed1 CP 3/1 standard.

The channel-specific diagnostics do not affect the module status.

Structure of the channel-specific diagnostics

The number of channel-specific diagnostics events is limited to 8. All channel diagnostics are reported via slot 1 with ID number 0.

Note

Messages that refer to the PA redundancy, e.g. "Partner DP/PA coupler removed or defective", are reported via the PA redundancy status.

The channel-specific diagnostic data for the DP/PA coupler is setup as follows:

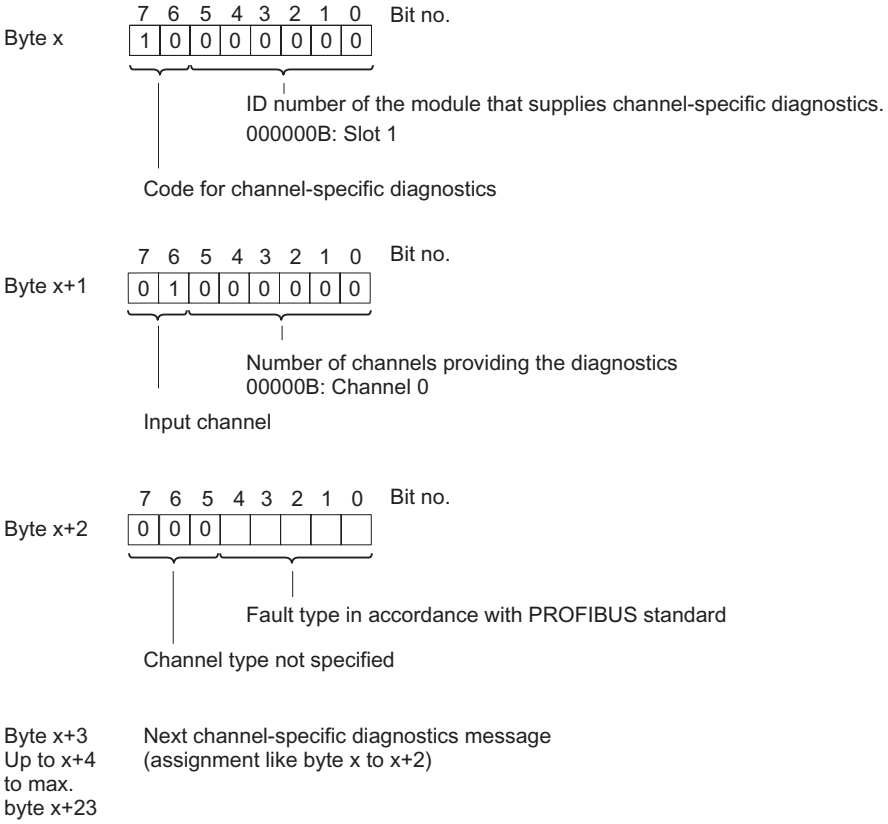

Figure 12-17 Structure of the channel-specific diagnostics

DP/PA coupler FDC 157-0 - fault types

Table 12-20 DP/PA coupler FDC 157-0 - fault types

Fault type		Error text	Meaning	Remedy
00001_B	1_D	Short-circuit	Equipotential bonding line short-circuited	• Eliminate the fault on the equipotential bonding line. • Check the process wiring.
00110_B	6_D	Wirebreak	Equipotential bonding line interrupted	Eliminate the fault on the equipotential bonding line.
01001_B	9_D	Defective coupler	-	Replace the DP/PA coupler.
10000_B	16_D	Parameter assignment error	Configured redundancy mode and redundancy mode set on the DP/PA coupler do not match.	Check the configured redundancy mode or the redundancy mode set on the DP/PA coupler.
10001_B	17_D	Process voltage missing.	• 24 V power supply PS voltage is missing or too low. • Power Supply PS is faulty. • Partner coupler power logic.	• Check the power supply on the Power Supply PS. • Check the process wiring.

Fault type		Error text	Meaning	Remedy
11000_B	24_D	PA redundancy fault	• Wire break or short-circuit between two active field distributors. • Failure of a DP/PA coupler.	• Check the processing wiring between the AFDs. • Check the defective DP/PA coupler.
11010_B	26_D	External fault	DP/PA coupler in redundancy mode: The redundancy modes of the DP/PA coupler pair do not match.	• Check the configured redundancy mode on the DP/PA coupler. • Check the redundancy mode in the configuration.
11011_B	27_D	Signal level poor (default setting: disabled)	Warning that the signal level on the equipotential bonding line is in the limit range.	Check the lead length of the equipotential bonding line and the process wiring.

See also

PA redundancy status (Page 12-37)

12.3.2.10 H status

H-status (only for operation of the DP/PA coupler in the redundant DP/PA link)

The H-status ensures fault-free operation on the equipotential bonding line even when switching over on the overlaid PROFIBUS DP chain. It is irrelevant for the user.

Technical specifications 13

13.1 General technical specifications

What are general technical specifications?

The technical specifications contain:

- The standards and test values that observe and fulfil the described components.
- The test criteria used to test the described components.

13.1.1 Standards and Approvals

Standards and Approvals

The components described meet the following standards and approvals.

Exceptions:

- DP/PA Ex [i] coupler: Deviations from the standards and approvals listed here are available in the respective chapters.
- Active field distributors (AFD) and splitters (AFS): The valid standards and approvals are available in the respective chapter.

CE Label

The described components meet the requirements and protective aims of the following EC directives and comply with the harmonized European Standards (EN), published for programmable logic controllers (PLC) in the official gazettes of the European Union.

- 73/23/EEC "Electrical Equipment Designed for Use within Certain Voltage Limits" (Low-Voltage Directive)
- 89/336/EEC "Electromagnetic Compatibility" (EMC directive)
- 94/9/EC "Equipment and protective systems intended for use in potentially explosive atmospheres" (ATEX).

The EC declarations of conformity are kept available for the responsible authorities at the following address:

Siemens Aktiengesellschaft
Automation & Drives Technology Division
A&D AS RD ST Type Test
P.O. Box 1963
D-92209 Amberg

ATEX Approval

KEMA 02ATEX1096 X
conforming to EN 60079:-15 (Electrical apparatus for potentially explosive atmospheres; Type of protection "n")

 II 3 G EEx nA II Tx

Warning

Personal injury and material damage can be incurred.

In potentially explosive atmospheres, personal injury and material damage can be incurred if plug connections are disconnected during operation.

In potentially explosive atmospheres, only disconnect the plug connections of all components when they are not under current.

UL / CSA Approval

Underwriters Laboratories Inc. in accordance with

Ordinary locations

- UL 508 (Industrial Control Equipment)
- CSA C22.2 No. 142 (Process Control Equipment)

Hazardous locations

- UL 1604
- CSA 213

APPROVED for use in
Class I, Division 2, Group A, B, C, D Tx;
Class I, Zone 2, Group IIC Tx

Note

Currently valid certifications can be found on the rating of the relevant module.

FM Approval

Factory Mutual Research (FM) in accordance with

Approval Standard Class Number 3611 (1999)

Class I, Division 2, Group A, B, C, D Tx;
Class I, Zone 2, Group IIC Tx

Tick-mark for Australia

The described components meet the requirements of the Norm AS/NZS 2064 (Class A) standard.

IEC 61131

The described components meet the requirements and criteria of the IEC 61131-2 standard (programmable logic controllers, part 2 Equipment requirements and tests).

PROFIBUS standard

The described components are based on the IEC 61784-1:2002 Ed1 CP 3/1 standard.

PROFIBUS PA

The DP/PA coupler meets the requirements and criteria of the PROFIBUS PA directive.

Use in industry

SIMATIC products are designed for industrial applications.

Table 13-1 Use in industry

Area of Application	Requirements in respect of	
	Noise emission	Noise immunity
Industry	EN 61000-6-4: 2001	EN 61000-6-2: 2001

Use in residential areas

If you use the described components in residential areas, you must ensure that they comply with the limit value class B in accordance with EN 55011 with regard to the emission of radio interference.

Suitable measures for achieving RF suppression to Limit Value Class B:

- Installation of grounded switching cabinets / switchboxes
- Use of noise filters in the supply lines

13.1.2 Standards and approvals of the DP/PA Ex [i] coupler (6ES7157-0AD81-0XA0)

Standards and Approvals

The DP/PA Ex [i] coupler complies with the aforementioned standards and approvals with the following deviations:

ATEX approval

KEMA 01ATEX1028 X
according to EN 50014: 1997, EN 50020: 1994, EN 60079-15 and EN 50284: 1999

Ex II 3 (1) G EEx nA [ia] IIC T4

Warning

Injury to persons may result.

In potentially explosive atmospheres, personal injury and material damage can be incurred if plug connections are disconnected during operation.

In potentially explosive atmospheres, only disconnect the plug connections of all components when they are not under current.

UL / CSA Approval

Underwriters Laboratories Inc. in accordance with

Ordinary locations

- UL 508 (Industrial Control Equipment)
- CAN/CSA C22.2 no. 14-M91(Process Control Equipment)

Hazardous locations

- UL 1604, Third Edition
- UL 913, Sixth Edition
- UL 2279, First Edition
- CAN/CSA C22.2 No. 213-M1987
- CAN/CSA C22.2 No. 157-92
- E79-11 and E79-15

APPROVED for use in
Class I, Division 2, Group A, B, C, D T4
Class I, Zone 2, Group IIC T4
AIS Class I, Division 1, Group A, B, C, D
[AExia] IIC, Class I, Zone 0, 1, 2, Group IIC

FM Approval

Factory Mutual Research (FM) in accordance with

Approval Standard Class Numbers 3600 (1998), 3610 (1999), 3611 (1999), 3810 (1989),

Class I, Division 2, Group A, B, C, D T4
Class I, Zone 2, Group IIC T4
AIS Class I, Division 1, Group A, B, C, D
[AExia] IIC, Class I, Zone 0, 1, 2, Group IIC

13.1.3 Standards and approvals of the DP/PA Ex [i] coupler (6ES7157-0AD82-0XA0)

Standards and Approvals

The DP/PA Ex [i] coupler complies with the aforementioned standards and approvals with the following deviations:

ATEX approval

KEMA 03ATEX1416 X
according to EN 50014: 1997, EN 50020: 1994, EN 60079-15, EN 50284: 1999 and EN 50281-1-1: 1998

Ex II 3 (1) GD EEx nA [ia] IIC T4

Warning

Injury to persons may result.

In potentially explosive atmospheres, personal injury and material damage can be incurred if plug connections are disconnected during operation.

In potentially explosive atmospheres, only disconnect the plug connections of all components when they are not under current.

UL / CSA Approval

Underwriters Laboratories Inc. in accordance with

Ordinary locations

- UL 508 (Industrial Control Equipment)
- CAN/CSA C22.2 no. 14-M91(Process Control Equipment)

Hazardous locations

- UL 1604, Third Edition
- UL 913, Sixth Edition
- UL 2279, First Edition
- CAN/CSA C22.2 No. 213-M1987
- CAN/CSA C22.2 No. 157-92
- E79-11 and E79-15

APPROVED for use in
Class I, Division 2, Group A, B, C, D T4
Class I, Zone 1, Group IIC
AIS Class I, Division 1, Group A, B, C, D
AIS Class II, Division 1, Group E, F, G
AIS Class III, Division 1
[AEx ib/ia] IIC, Class I, Zone 0, 1, 2, Group IIC

FM Approval

Factory Mutual Research (FM) in accordance with

Approval Standard Class Numbers 3600 (1998), 3610 (1999), 3611 (1999), 3810 (1989),

Class I, Division 2, Group A, B, C, D T4
Class I, Zone 1, Group IIC
AIS Class I, Division 1, Group A, B, C, D
AIS Class II, Division 1, Group E, F, G
AIS Class III, Division 1
[AEx ib/ia] IIC, Class I, Zone 0, 1, 2, Group IIC

13.1.4 Standards and approvals of the active field distributors (AFD) and splitters (AFS)

CE Label

The described components meet the requirements and protective aims of the following EC directives and comply with the harmonized European Standards (EN), published for programmable logic controllers (PLC) in the official gazettes of the European Union.

- 73/23/EEC "Electrical Equipment Designed for Use within Certain Voltage Limits" (Low-Voltage Directive)
- 89/336/EEC "Electromagnetic Compatibility" (EMC directive)
- 94/9/EC "Equipment and protective systems intended for use in potentially explosive atmospheres" (ATEX).

The EC declarations of conformity are kept available for the responsible authorities at the following address:

Siemens Aktiengesellschaft
Automation & Drives Technology Division
A&D AS RD ST Type Test
P.O. Box 1963
D-92209 Amberg

ATEX Approval

KEMA 02ATEX1096 X
conforming to EN 60079:-15 (Electrical apparatus for potentially explosive atmospheres; Type of protection "n")

Ex II 3 G EEx nA II Tx

Warning

Personal injury and material damage can be incurred.

In potentially explosive atmospheres, personal injury and material damage can be incurred if plug connections are disconnected during operation.

In potentially explosive atmospheres, only disconnect the plug connections of all components when they are not under current.

UL / CSA Approval

Underwriters Laboratories Inc. in accordance with

Ordinary locations

- UL 508 (Industrial Control Equipment)
- CSA C22.2 No. 142 (Process Control Equipment)

Hazardous locations

- UL 1604
- CSA 213

APPROVED for use in
Class I, Division 2, Group A, B, C, D Tx;
Class I, Zone 2, Group IIC Tx

Note

Currently valid certifications can be found on the rating of the relevant module.

FM Approval

Factory Mutual Research (FM) in accordance with

Approval Standard Class Number 3611 (1999)

Class I, Division 2, Group A, B, C, D Tx;
Class I, Zone 2, Group IIC Tx

Use in industry

SIMATIC products are designed for industrial applications.

Table 13-2 Use in industry

Area of Application	Requirements in respect of	
	Noise emission	Noise immunity
Industry	EN 61000-6-4: 2001	EN 61000-6-2: 2001

13.1.5 Use in zone 2 potentially explosive areas

Refer to the product information: *Use of subassemblies / modules in a zone 2 Hazardous Area*.

You will find the product information on the Internet at:

http://support.automation.siemens.com

Search for the entry with the number 19692172.

13.1.6 Electromagnetic Compatibility

Introduction

This chapter provides you with information on the immunity to interference of the described components as well as on radio interference suppression.

The described components meet, among others, the requirements of the EMC legislation of the European single market.

Definition: EMC

Electromagnetic compatibility (EMC) is the capacity of an electrical installation to function satisfactorily in its electromagnetic environment without affecting that environment.

Pulse-shaped Interference

The table below shows the electromagnetic compatibility of the described components with regard to pulse-shaped interference. The prerequisite for this is that the system complies with the relevant requirements and guidelines relating to electrical equipment.

Table 13-3 Pulse-shaped Interference

Pulse-shaped disturbance	Tested at	Corresponds to severity
Electrostatic discharge according to IEC 61000-4-2	8 kV 6 kV	3 (air discharge) 3 (contact discharge)
Burst impulses (fast transient interference) according to IEC 61000-4-4	2 kV (supply line) 2 kV (signal line)	3
High-energy current surge according to IEC 61000-4-5 External protection circuitry required (refer to installation manual: *S7-300 Automation System, Hardware and Installation: CPU 312 IFM -- 318-2 DP*, Chapter *Lightning and Overvoltage Protection*)		
• Asymmetric interference	2 kV (supply line) 2 kV (signal cable/data line)	3
• Symmetric interference	1 kV (supply line) 1 kV (signal line / data line)	

Sinusoidal disturbance

EMC performance of the described components in relation to sinusoidal disturbance variables:

- RF radiation to IEC 61000-4-3
  Electromagnetic RF field, amplitude modulated
  - 80 MHz to 1000 MHz / 1.4 GHz to 2 GHz
  - 10 V/m
  - 80% AM (1 kHz)
- RF coupling to IEC 61000-4-6
  - 0.15 to 80 MHz
  - 10 Veff unmodulated
  - 80% AM (1 kHz)
  - 150 Ω source impedance

Emission of Radio Interferences

Emission of interference from electromagnetic fields in compliance with EN 55011: limit value class A, group 1

from 30 to 230 MHz	< 40 dB (µV/m)Q
from 230 to 1000 MHz	< 47 dB (µV/m)Q
measured at a distance of 10 m	

Interference emission supply lines in accordance with EN 55011: limit value class A, group 1

from 0.15 to 0.5 MHz	< 79 dB (µV)Q < 66 dB (µV) M
from 0.5 to 5 MHz	< 73 dB (µV)Q < 60 dB (µV) M
from 5 to 30 MHz	< 73 dB (µV)Q < 60 dB (µV) M

13.1.7 Shipping and storage conditions

Transport and Storage of Modules

With regard to their transport and storage conditions, the described components exceed the requirements according to IEC 611131, Part 2. The following specifications apply to modules transported and stored in the original packaging.

Table 13-4 Transport and storage conditions

Type of condition	Permitted range
Free fall (in transport packaging)	≤ 0.3 m
Temperature	from -40 °C to + 70 °C
Atmospheric pressure	from 1080 to 660 hPa (corresponds to an altitude of -1000 to 3500 m)
Relative humidity	of 10 to 95 %, without condensation
Sinusoidal vibrations according to IEC 60068-2-6	5 to 9 Hz: 3.5 mm 9 to 150 Hz: 9.8 m/s^2
Shock according to IEC 60068-2-29	250 m/s^2, 6 ms, 1000 shocks

13.1.8 Mechanical and climatic ambient conditions for operation

Conditions of use

The described components are designed for use in a fixed, sheltered location. The operating conditions exceed the requirements of IEC 61131 Part 2.

The described components meet the operating conditions of Class 3C3 in accordance with DIN EN 60721-3-3.

Use with additional measures

The described components must not be operated without additional measures:

- at locations with a high degree of ionizing radiation
- in aggressive environments caused, for example, by
  - the development of dust
  - corrosive vapors or gases
  - strong electric or magnetic fields
- in installations requiring special monitoring, for example
  - elevators
  - electrical plants in potentially hazardous areas

An additional measure can be installation in a cabinet or in an enclosure, for instance.

Mechanical ambient conditions

The mechanical ambient conditions for the described components are specified in the table below for sinusoidal vibrations.

Table 13-5 Mechanical ambient conditions

Frequency range in Hz	Continuous	Infrequently
10 ≤ f ≤ 58	0.0375 mm amplitude	0.075 mm amplitude
58 ≤ f ≤ 150	0.5 *g* constant acceleration	1 *g* constant acceleration

Reduction of vibrations

If the described components are exposed to greater shocks or vibrations, you must reduce the acceleration or the amplitude by taking suitable measures.

We recommend securing the described components on shock-absorbing materials (for instance on vibration absorbing metal)

Compatibility test, mechanical environmental conditions

The table below provides information on the type and scope of the test of mechanical environmental conditions.

Table 13-6 Test of mechanical environmental conditions

Test for ...	Test standard	Remarks
Vibration	Vibration test in compliance with IEC 60068 Part 2-6 (Sine)	Type of oscillation: Frequency cycles at a rate of change of 1 octave per minute. 10 Hz ≤ f ≤ 58 Hz, constant amplitude 0.075 mm 58 Hz ≤ f ≤ 150 Hz, constant acceleration 1 g Duration of oscillation: 10 frequency cycles per axis in each of the 3 mutually perpendicular axes
Shock	Shock test in compliance with IEC 60068 Part 2-29	Type of shock: half-sine Severity of shock: 15 g peak value, 11 ms duration Direction of shock: 3 shocks each in the +/- direction in each of the 3 mutually perpendicular axes

Climatic environmental conditions

The described components may be operated under the following climatic ambient conditions:

Table 13-7 Climatic environmental conditions

Ambient conditions	Permissible range	Remarks
Temperature: horizontal installation vertical installation	 from 0 to 60 °C from 0 to 40 °C	IM 153-2 (6ES7153-2BA01-0XB0) Y coupler 6ES7197-1LB00-0XA0 Bus module BM IM/IM 6ES7195-7HD10-0XA0 Bus module BM Y coupler 6ES7654-7HY00-0XA0
Temperature: horizontal installation vertical installation	 from -25 to 60 °C from -25 to 40 °C	IM 153-2 Outdoor 6ES7153-2BA81-0XB0 DP/PA coupler FDC 157-0 6ES7157-0AC83-0XA0 DP/PA coupler 6ES7157-0AC82-0XA0 DP/PA coupler Ex [i] 6ES7157-0AD81-0XA0 6ES7157-0AD82-0XA0 Bus module BM IM/IM 6ES7195-7HD80-0XA0 Bus module BM DP/PA coupler 6ES7195-7HF80-0XA0 Bus module BM FDC157-0 6ES7195-7HG80-0XA0
Temperature: any installation	 from -25 to 70 °C	Active field distributor (AFD) 6ES7157-0AF81-0XA0 Active field splitter (AFS) 6ES7157-0AF82-0XA0

Ambient conditions	Permissible range	Remarks
Relative humidity	10 to 95 %	Without condensation, corresponds to relative humidity (RH) strain grade 2 according to IEC 61131 Part 2 With condensation: Active field distributor (AFD) Active field splitter (AFS)
Atmospheric pressure	from 1080 hPa to 795 hPa	corresponds to an altitude of -1000 to 2000 m
Concentration of pollutants	SO_2: < 0.5 ppm; RH < 60 %, no condensation H_2S: < 0.1 ppm; RH < 60 %, no condensation	Test: 10 ppm; 4 days Test: 1 ppm; 4 days

13.1.9 Specifications for insulation tests, protection class and degree of protection

Test voltages

The insulation stability is tested with the following voltages during product testing:

Table 13-8 Test voltages

Circuits with a rated voltage of U_e relative to other circuits or ground	Test voltage
0 V < U_e ≤ 50 V	DC 600 V, 1 s

Protection class

Protection class I in compliance with IEC 61140; this means that a grounding terminal to the rail is required!

Protection against foreign bodies and water

Protection class IP 20 according to IEC 60529; that is protection against contact with standard probes.

There is no protection from penetration by water.

13.1.10 Rated voltage

Rated voltage for operation

The described components work with a rated voltage of 24 V DC.
The tolerance range extends from 20.4 V DC to 28.8 V DC.

Exception:

The AFDs and AFSs work with a rated voltage of 16 V DC.
The tolerance range extends from 16 V DC to 32 V DC.

13.2 Technical specifications of the IM 153-2 (6ES7153-2Bxx1-0XB0)

Dimensions and weight	
Dimension W x H x D (mm)	40 x 125 x 130
Weight	approx. 350 g
Module-specific data	
Transmission speed for the higher level DP master system	9.6; 19.2; 45.45; 93.75; 187.5; 500 kBaud 1.5; 3; 6; 12 MBaud
Bus protocol	PROFIBUS DP
Frame length I / O data	Max. 244 bytes
Length of configuration frame	Max. 244 bytes
Length of diagnostic frame	Max. 231 bytes
Length of parameterization frame	Max. 223 bytes
suitable for system modifications during operation	Yes
Voltages, currents, potentials	
Rated supply voltage	24 VDC (20.4 V … 28.8 V)
• Polarity reversal protection	Yes
• Power failure bypass	20 ms
Electrical isolation	
• to a high-level DP master system	Yes
• to the DP/PA or Y coupler	No
Insulation tested using	500 VDC
when used in the DP/PA link	
• Power consumption (24 VDC)	Max. 100 mA
• Power loss	Typically 2 W
when used in the Y link	
• Power consumption (24 VDC)	Max. 200 mA
• Power loss	Typically 4 W

Status, interrupts, diagnostics	
Status display	No
Interrupts	Yes
Diagnostic function	Yes
• Group error	Red LED "SF"
• Bus error on higher level DP master system	Red LED "BF 1"
• Bus error on underlying bus system	Red LED "BF 2"
• IM has an active channel	Yellow LED "ACT"
• Monitoring 24 V voltage supply	Green "ON" LED
Data for connecting underlying bus components	
DP/PA coupler can be connected	Max. 5
Y coupler can be connected	1
Underlying slaves can be connected	Max. 64
Number of slots in underlying slaves	max. 236 or (244 minus number of PA field devices)

13.3 Technical data DP/PA coupler FDC 157-0 (6ES7157-0AC83-0XA0)

Dimensions and weight	
Dimensions W x H x D (mm)	80 x 125 x 130
Weight	Approx. 515 g
Module-specific data	
Transmission speed on PROFIBUS DP	45.45 kBaud
Transmission speed on PROFIBUS PA	31.25 kBaud
Bus protocol	PROFIBUS DP
Voltages, currents, potentials	
Nominal power supply voltage	DC 24 V (20.4 V ... 28.8 V)
• Reverse polarity protection	Yes
• Overvoltage protection	Yes
Output voltage for PA segment:	DC 31 V ± 1 V
• Voltage monitoring	15.5 V
• Overvoltage monitoring	U > 35 V; holding switch-off
• Power failure bypass	min. 5 ms
Galvanic isolation of the 24 V power supply	
• PROFIBUS DP / PROFIBUS PA	Yes
• PROFIBUS DP / power supply	Yes
• PROFIBUS PA / power supply	Yes
• All electric circuits / FE	Yes
Isolation test voltage	500 V DC
DP/PA coupler power consumption (24 V DC)	max. 2.3 A

Output current PA section (for dimensioning the PA configuration)	
• Up to 50° ambient temperature	1 A
• Up to 60° ambient temperature	0.8 A
Power dissipation of the module	Typically 13.4 W
Status, interrupts, diagnostics	
Status display	No
Interrupts	none
Diagnostics function	Yes
• Group error	Red LED "SF"
• Bus error	Red "BF" LED
• PROFIBUS DP bus monitoring	Yellow LED "DP"
• PROFIBUS PA bus monitoring	Yellow LED "PA"
• DP/PA coupler monitoring	Yellow "ACT" LED
• Monitoring 24 V voltage supply	Green "ON" LED
Data for selecting the PA field devices	
Connection to DP/PA couplers	• Max. power consumption of the PA field devices altogether 1 A • Field devices with certification for PROFIBUS PA • Field devices are located **outside** the Ex area • max. 31 PA field devices can be connected

13.4 Technical specifications for DP/PA Ex [i] coupler (6ES7157-0AD81-0XA0, 6ES7157-0AD82-0XA0)

Dimensions and weight	
Dimension W x H x D (mm)	80 x 125 x 130
Weight	approx. 515 g
Module-specific data	
Transmission speed on PROFIBUS DP	45.45 kbaud
Transmission speed on PROFIBUS PA	31.25 kbaud
Bus protocol	PROFIBUS DP
6ES7157-0AD81-0XA0	
Ignition protection as accompanying equipment	Ex II 3 (1) G EEx nA [ia] IIc T4
6ES7157-0AD82-0XA0	
Ignition protection as accompanying equipment	Ex II 3G (1) GD EEx nA [ia] IIc T4

Voltages, currents, potentials	
Rated supply voltage	24 VDC (20.4 V ... 28.8 V)
• Polarity reversal protection	Yes
• Power failure bypass	Min. 5 ms
PA interface	
• Output voltage	13 V … 14 VDC
• Output current at:	Max. 110 mA
Electrical isolation of the 24 V power supply	
• to PROFIBUS DP	Yes
• to PROFIBUS PA	Yes
Insulation tested at	500 VAC
DP/PA coupler power consumption (24 VDC)	Max. 400 mA
Power loss of the module	Typically 7 W
Status, interrupts, diagnostics	
Status display	No
Interrupts	None
Diagnostic function	Yes
• PROFIBUS DP bus monitoring	Yellow LED "DP"
• PROFIBUS PA bus monitoring	Yellow LED "PA"
• Monitoring 24 V voltage supply	Green "ON" LED
Ex [i] characteristic data	
• U_o	= 15 V
• I_o (…-0AD81-…)	= 249 mA
• I_o (…-0AD82-…)	= 247 mA
• P_o	= 1.95 W
• U_m	= 60 VDC / 30 VAC
• T_a	= -25 to +60 °C
Connectable cables (PA)	
• R'	15 … 150 Ω/km
• L'	0,4 … 1 mH/km
• C'	80 … 200 nF/km
• Length	max. 1000 m; for safety reasons (Ex protection)
Data for selecting the PA field devices	
Connection to DP/PA couplers	• Field devices with certification for PROFIBUS PA • max. 31 PA field devices can be connected • Power consumption of all PA field devices: max. 110 mA
Approval data of the PA field devices must conform to the Ex [i] characteristic data of the DP/PA coupler:	
• U_o	≥ 15 V
• I_o	≥ 247 mA
• P_o	≥ 1.95 W
• U_m	≥ 60 VDC / 30 VAC
• L_i	< 10 µH
• C_i	< 5 nF
• U_i	≥ 15 V
• I_i (…-0AD81-…)	≥ 249 mA
• I_i (…-0AD82-…)	≥ 247 mA
• P_i	≥ 1.95 W

13.5 Technical specifications for DP/PA coupler (6ES7157-0AC82-0XA0)

Dimensions and weight	
Dimension W x H x D (mm)	80 x 125 x 130
Weight	approx. 515 g
Module-specific data	
Transmission speed on PROFIBUS DP	45.45 kbaud
Transmission speed on PROFIBUS PA	31.25 kbaud
Bus protocol	PROFIBUS DP
Voltages, currents, potentials	
Rated supply voltage	24 VDC (20.4 V ... 28.8 V)
• Polarity reversal protection	Yes
Output voltage for PA section:	31 VDC ± 1 V
• Power failure bypass	Min. 5 ms
electrical isolation of the 24 V power supply	
• to PROFIBUS DP	Yes
• to PROFIBUS PA	Yes
Insulation tested with	500 VDC
DP/PA coupler power consumption (24 VDC)	max. 1.8 A
Output current PA section (for dimensioning the PA configuration)	1 A
Power loss of the module	Typically 12 W
Status, interrupts, diagnostics	
Status display	No
Interrupts	None
Diagnostic function	Yes
• PROFIBUS DP bus monitoring	Yellow LED "DP"
• PROFIBUS PA bus monitoring	Yellow LED "PA"
• Monitoring 24 V voltage supply	Green "ON" LED
Data for selecting the PA field devices	
Connection to DP/PA couplers	• max. power consumption of the PA field devices alogether 1 A • Field devices with certification for PROFIBUS PA • Field devices are located **outside** the Ex area • max. 31 PA field devices can be connected

13.6 Technical specifications Y coupler (6ES7197-1LB00-0XA0)

Dimensions and weight	
Dimension W x H x D (mm)	40 x 125 x 130
Weight	approx. 200 g
Module-specific data	
Transmission speed for the underlying DP master system	45.45; 93.75; 187.5; 500 kBaud 1.5; 3; 6; 12 MBaud
Bus protocol	PROFIBUS DP
Length of parameterization frame	Max. 244 bytes
Voltages, currents, potentials	
Voltage supply	via bus module
Power consumption	Max. 300 mA
Power loss of the module	Typically 1 W
Potential isolation from underlying DP master system	Yes
Insulation tested with	500 VDC
Status, interrupts, diagnostics	
Status display	No
Interrupts	None
Diagnostic function	Yes
• Bus monitoring of internal PROFIBUS DP	Yellow LED "DP 1"
• Bus monitoring of external PROFIBUS DP	Yellow LED "DP 2"
• Monitoring of the voltage supply	Green "ON" LED
Data for connecting DP slaves	
DP slaves can be connected	max. 64*
Termination of the underlying DP master system	Active terminator resistor (BUS TERMINATOR)
Use of RS 485 repeaters	Max. 8
Use of OLM / OBT	Yes
* Only if RS 485 repeaters or OLM / OBT are used, otherwise max. 31	

13.7 Technical data - active field distributor (AFD) (6ES7157-0AF81-0XA0)

Dimensions and weight	
Dimensions W x H x D (mm)	120 x 57 x 80
Weight	Approx. 700 g
Voltages, currents, potentials	
Nominal power supply voltage	DC 16 V (16 V ... 32 V)
U_{max}	35 V
• Reverse polarity protection	Yes
Output voltage for PA segment:	DC 31 V ± 1 V
• Power failure bypass	5 ms
Current consumption	Typically 20 mA
Output current PA section (for dimensioning the PA configuration)	1 A
Power dissipation of the module	Typically 600 mW
Status, interrupts, diagnostics	
Status display	No
Interrupts	none
Diagnostics function	Yes
• Status PA main line PA1, PA2	Green LED
• Error PA main line PA1, PA2	red LED
• Status / error PA spur line X1 to X4	Green LED
Data for selecting the PA field devices	
Connection	• Max. power consumption of the PA field devices altogether 1 A • Field devices with certification for PROFIBUS PA • Field devices are located **outside** the Ex area • Max. 4 PA field devices can be connected
Current I_{max} per PA spur line X1 to X4	• 60 mA

13.8 Technical data - active field splitter (AFS) (6ES7157-0AF82-0XA0)

Dimensions and weight	
Dimensions W x H x D (mm)	120 x 57 x 80
Weight	Approx. 700 g
Voltages, currents, potentials	
Nominal power supply voltage	DC 16 V (16 V ... 32 V)
• Reverse polarity protection	Yes
• Overvoltage protection	Yes
Output voltage for PA segment:	DC 31 V ± 1 V
• Power failure bypass	5 ms
Current consumption	Typically 20 mA
Output current PA section (for dimensioning the PA configuration)	1 A
Power dissipation of the module	Typically 600 mW
Status, interrupts, diagnostics	
Status display	No
Interrupts	none
Diagnostics function	Yes
• Status PA main line PA1, PA2	Green LED
• Error PA main line PA1, PA2	red LED
Data for selecting the PA field devices	
Connection to DP/PA couplers	• Max. power consumption of the PA field devices altogether 1 A • Field devices with certification for PROFIBUS PA • Field devices are located **outside** the Ex area • Max. 31 PA field devices can be connected

Order numbers

A

A.1 Components of the bus couplings

Components of the bus couplings

Table A-1 Order numbers for the components of the bus couplers

Component	Order number
IM 153-2	6ES7153-2BA01-0XB0
IM 153-2 Outdoor	6ES7153-2BA81-0XB0
DP/PA coupler FDC 157-0	6ES7157-0AC83-0XA0
DP/PA coupler	6ES7157-0AC82-0XA0
DP/PA coupler Ex [i]	6ES7157-0AD81-0XA0
DP/PA coupler Ex [i]	6ES7157-0AD82-0XA0
Y coupler	6ES7197-1LB00-0XA0
Bus module BM PS/IM	6ES7195-7HA00-0XA0
Bus module BM IM/IM	6ES7195-7HD10-0XA0
Bus module BM IM/IM Outdoor	6ES7195-7HD80-0XA0
Bus module BM DP/PA coupler	6ES7195-7HF80-0XA0
Bus module BM FDC 157-0 (left/right bus module)	6ES7195-7HG80-0XA0
Bus module BM Y coupler	6ES7654-7HY00-0XA0
Active Field Distributor (AFD)	6ES7157-0AF81-0XA0
Active Field Splitter (AFS)	6ES7157-0AF82-0XA0
Complete package Y link, consisting of:	
• 2 x IM 157 • 1 x bus module BM IM/IM • 1 x Y coupler • 1 x bus module BM Y coupler:	6ES7197-1LA02-0XA0
• 2 x IM 153-2 • 1 x bus module BM IM/IM • 1 x Y coupler • 1 x bus module BM Y coupler:	6ES7197-1LA03-0XA0

Table A-2 Order number for configuration accessories

Component	Order number
Mounting rail for the "module exchange in operation" function • 482.6 mm • 530 mm • 620 mm • 2000 mm	 6ES7195-1GA00-0XA0 6ES7195-1GF30-0XA0 6ES7195-1GG30-0XA0 6ES7195-1GC00-0XA0
Mounting rail adapter	6ES7157-0AF83-0XA0
Bus connector for S7 mounting rail (is included with every DP/PA coupler)	6ES7390-0AA00-0AA0
Covers (containing 4 backplane bus covers and 1 bus module cover)	6ES7195-1JA00-0XA0
Cable gland for the active field splitter (AFS)	order from: Jacob GmbH http://www.jacob-gmbh.de/ Order number 50.616 M/EMV
Plug for HSK Ex standard cable glands	order from: Hummel Elektrotechnik GmbH http://www.hummel-group.com/ Order number 1.296.0901.11

A.2 Accessories for PROFIBUS DP

Accessories for PROFIBUS DP

Table A-3 Order numbers for PROFIBUS DP accessories

Accessories	Order number
PROFIBUS DP bus connector (up to 12 MBaud)	
• without PD port	6ES7972-0BA12-0XA0
• with PD port	6ES7972-0BB12-0XA0
PROFIBUS DP FastConnect connector	
• without PD port	6ES7972-0BA50-0XA0
• with PD port	6ES7972-0BB50-0XA0
PROFIBUS DP bus cable	
• normal (flexible)	6XV1830-0AH10
• Drum cable (strong)	6XV1830-3BH10
PROFIBUS DP terminator	6ES7972-0DA00-0XA0

A.3 Accessories for PROFIBUS PA

Accessories for PROFIBUS PA

Table A-4 Order numbers for PROFIBUS PA accessories

Accessories	Order number
PROFIBUS PA bus cable (cable type A)	6XV1830-5AH10

Configuration With the SpliTConnect Connector System

Create the configuration with the SpliTConnect connector system. The SpliTConnect connection system permits an easy-to-install configuration of PROFIBUS PA segments conforming to IEC 61784-1:2002 Ed1 CP 3/2 with field device connection points in intrinsically safe and non-intrinsically safe areas. The SpliTConnect connector system consists of the following components:

Accessories	Description	Order number
SpliTConnect Tap	T-connector for PA field device	6GK1905-0AA00
SpliTConnect M12 Outlet	Connecting element for M12 connection	6GK1905-0AB10
SpliTConnect Coupler	Connecting element between the taps	6GK1905-0AC00
SpliTConnect M12 Terminator (Ex)	Terminator resistor for potentially explosive areas	6GK1905-0AD00
SpliTConnect M12 Terminator	Terminator resistor for non-explosion hazardous areas	6GK1905-0AE00
SpliTConnect M12 Jack	Connecting element for M12 connection	6GK1905-0AF00

Bus terminating element

The SpliTConnect tap can also be extended as a bus terminating element.

Wiring with the (FastConnect) fast installation cable

Wire the PROFIBUS PA segments with the fast installation cable (FastConnect cable):

Accessories	Description	Order number
FC PROFIBUS PA (blue)	Fast installation cable	6XV1830-5EH10
FC PROFIBUS PA (black)		6XV1830-5FH10

Stripping

Strip the FastConnect cables with the FastConnect stripping tool. You can remove the outer covering and the braided shield with accurately to the millimeter in a single step with the FastConnect stripping tool

Accessories	Description	Order number
FastConnect Stripping Tool	Stripping tool	6GK1905-6AA00
Blade Cassettes	Spare blade cassettes	6GK1905-6AB00

Additional information

For additional information please refer to the *ST PI Catalog*.

Basics about PROFIBUS PA

B

PROFIBUS PA

PROFIBUS PA is the PROFIBUS for **P**rocess-**A**utomation (PA) and is based on IEC 61784-1:2002 Ed1 CP 3/2 for transmission technology and protocol and on the PA profile.

PROFIBUS PA = PROFIBUS DP communication protocol
+
synchronous transmission technology
+
Power supply to the PA field devices

Connectable field devices

You can connect any field device to the bus coupler DP/PA link that is suitable for PROFIBUS PA.

- Measuring transducers, valves, actuators etc.
- networked via a serial bus system
- for use in the chemicals industry and process engineering
- with field device feed via the data cable
- also for applications in the potentially explosive area (ignition protection type EEx [ia]

B.1 Intrinsic safety

Intrinsic safety

The basis for the intrinsic safety type of ignition protection consists in the necessity for a specific amount of ignition energy for ignition to take place in a potentially explosive atmosphere. In an intrinsically safe power circuit this minimum ignition energy is not present, neither in normal operation nor in case of fault. The intrinsic safety of a power circuit is achieved by limiting current and voltage so as to avoid sparks and high temperatures as possible sources of ignition. This limits the intrinsic safety type of ignition protection to relatively low output power circuits.

Spark ignition

So-called spark ignition is excluded because sparks that can normally occur owing to short circuit or ground fault during operation when a power circuit is opened or closed are excluded because current and voltage are limited as well as owing to the avoidance of major inductivities.

Heat ignition

In normal operation and in case of failure heat ignition is not possible because excessive heating of the equipment and leads in the intrinsically safe power circuit is excluded.

Additional information

For additional information on the topics intrinsic safety and explosion protection please refer to:

- the *Automation Systems S7-300, ET 200M Ex distributed I/O modules* manual, (order no. 6ES7398-8RA00-8xA0)
- *Investigation of intrinsic safety for field bus systems*; PTB Report W-53, Braunschweig, March 1993
- *PROFIBUS PA Commissioning Guide*,
  Notes on Using the IEC 61158-2 Technology for PROFIBUS,
  (German art. no. 2.091, English art. no. 2.092)
  PROFIBUS-Nutzerorganisation e. V.,
  Haid-und-Neu-Straße 7, D-76131 Karlsruhe
- on the Internet at
  http://www.profibus.com

B.2 Field device supply via PROFIBUS PA

Operating principle

When the DP/PA link bus coupler is used the field devices can be supplied via the data cable from PROFIBUS PA.

Set-up

The aggregate current of all the field devices must not exceed the maximum output power of the DP/PA coupler. The maximum output power therefore limits the number of field devices that can be connected to the PROFIBUS PA.

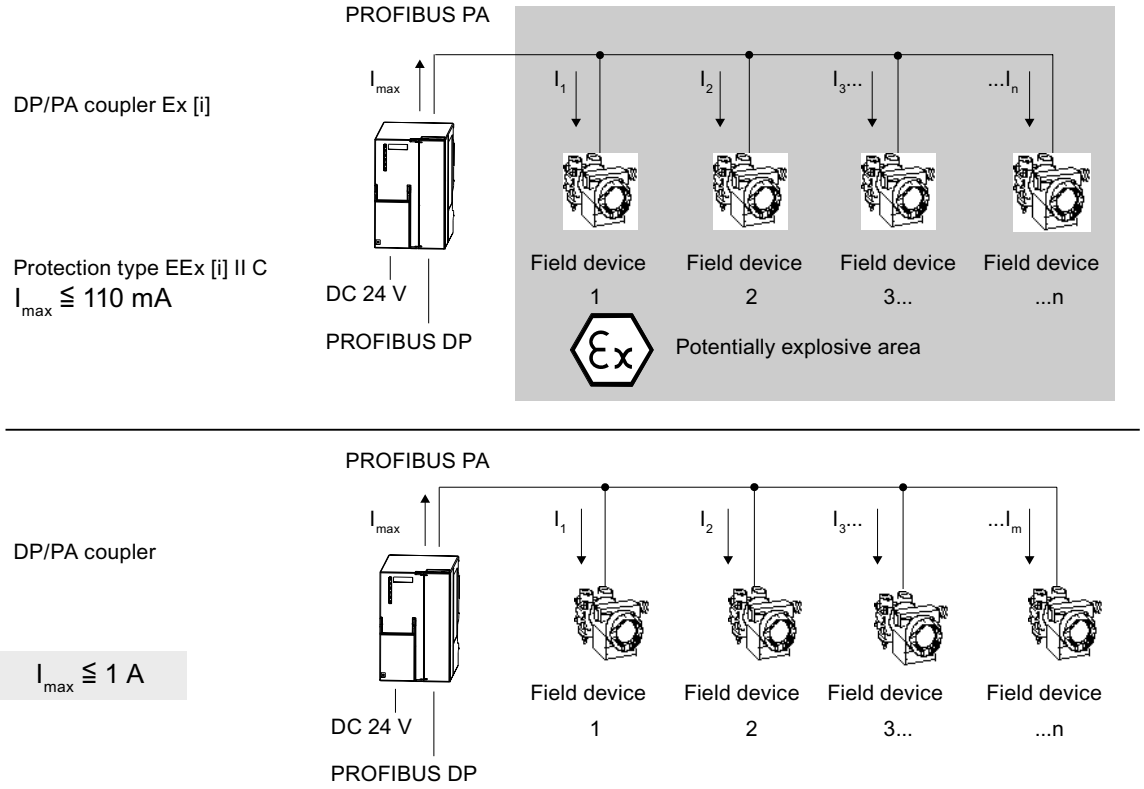

Figure B-1 Remote supply to field devices

Extension

You must use a further DP/PA coupler if you exceed the maximum output current of the DP/PA coupler.

See also

Configuration of PROFIBUS PA with the DP/PA link bus coupler (Page B-4)

B.3 Configuration of PROFIBUS PA with the DP/PA link bus coupler

Configuration

The figure below describes the configuration of a PROFIBUS PA system with one DP master

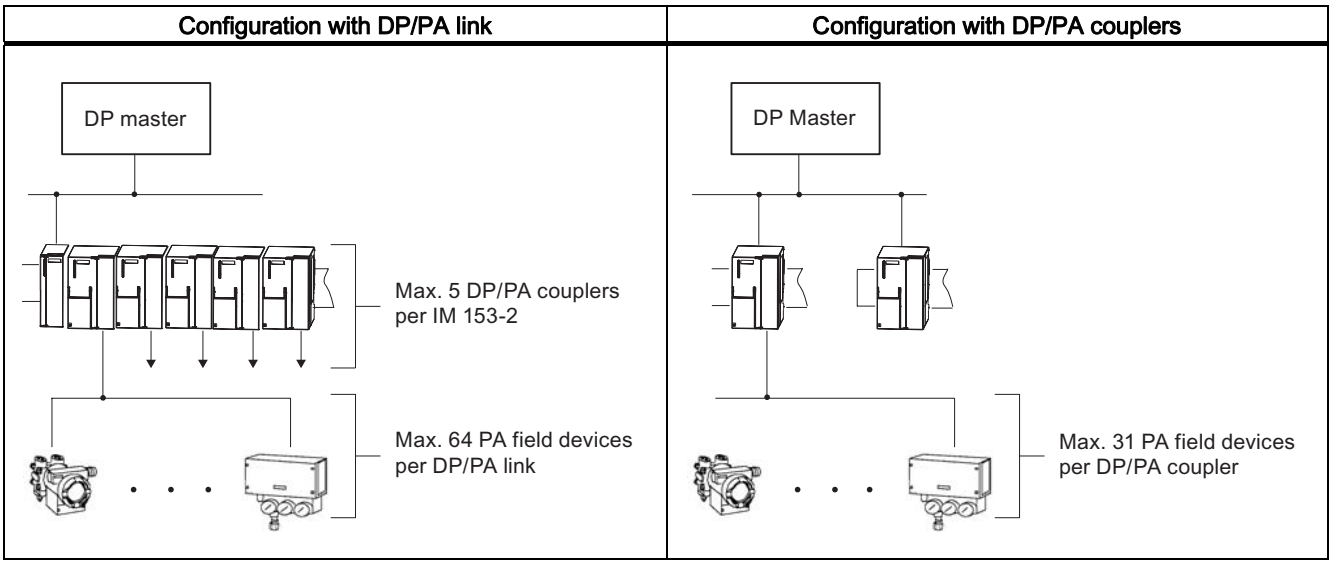

Rules

The following rules apply when configuring PROFIBUS PA:

- a maximum of 31 PA field buses may be present in a physical PROFIBUS PA segment.
- Only **one supply device** (= DP/PA couplers) can be connected in a given physical PROFIBUS PA segment.
- a maximum of 64 PA field devices may be attached in a DP/PA link. The maximum number of connectable PA field devices per physical PROFIBUS PA segment or per DP/PA coupler is limited by the maximum output current of the DP/PA coupler and the I/O data to be transmitted.

See also

Technical specifications for DP/PA Ex [i] coupler (6ES7157-0AD81-0XA0, 6ES7157-0AD82-0XA0) (Page 13-18)

Technical specifications for DP/PA coupler (6ES7157-0AC82-0XA0) (Page 13-20)

B.4 Line and star-type topology

Topology

The topology of PROFIBUS PA may be in linear or stellar form.

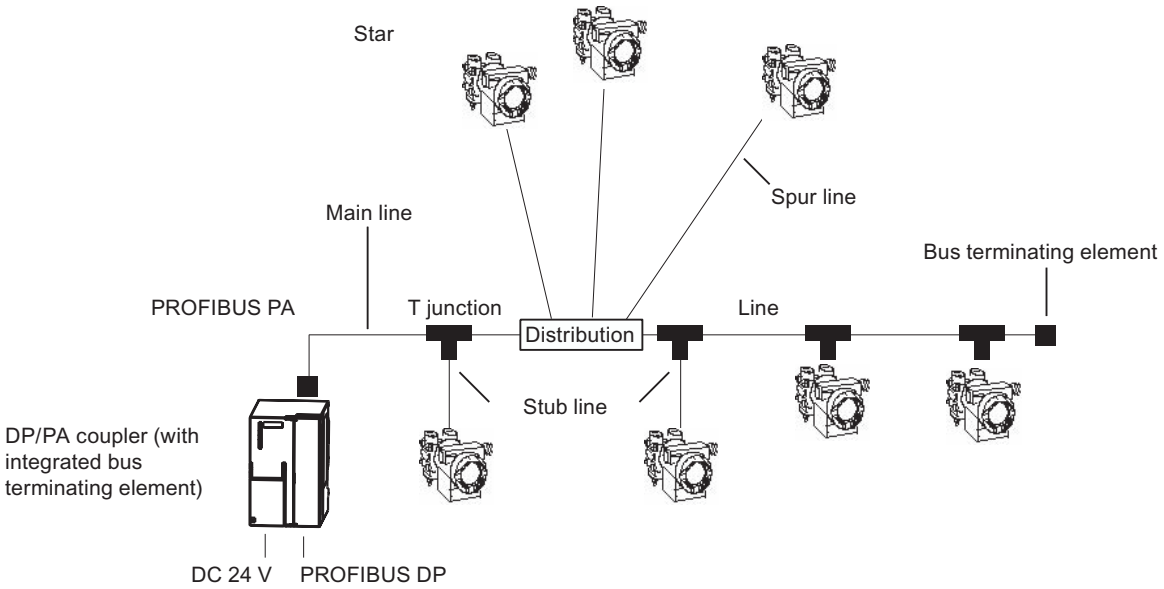

Figure B-2 Line and star-type topology

Network extension

The maximum length of the main line and the stub lines of a standard PROFIBUS PA cable (cable type A according to PNO) if the maximum current is drawn from DP/PA couplers is:

- 560 m for DP/PA couplers
- 920 m for DP/PA Ex [i] couplers

Note

If the aggregate power consumption is low and the PA field devices have a distributed arrangement, longer lines may be used.

Bus terminator for PROFIBUS PA

To ensure perfect operation the end of a PROFIBUS PA cable must definitely be equipped with a bus terminator.

An RC element connected in series must be used for the bus terminator (R = 100 Ω ± 2 %; C = 1 µF ± 20 %).

Stub Lines

The maximum permissible length for stub lines is to be found in the table below. Please pay attention to the maximum length of the aggregate line.

Table B-1 Stub line length for the DP/PA couplers

Number of stub lines	maximum length of a stub line	
	DP/PA coupler	DP/PA Ex [i] coupler:
1 to 12	max. 120 m	max. 30 m
13 to 14	max. 90 m	max. 30 m
15 to 18	max. 60 m	max. 30 m
19 to 24	max. 30 m	max. 30 m

See also

Accessories for PROFIBUS DP (Page A-2)

Accessories for PROFIBUS PA (Page A-3)

Glossary

Address

The address of a node is used for localising it in the network. It has to be unique in the entire network.

Aggregate current

Total current of all PA field devices

Automation system

An automation system is a programmable control system, consisting of at least one CPU, various input and output modules as well as operating and monitoring devices.

Bus

A common transfer route to which all nodes are connected; it has two defined ends.

Bus connector

Physical connection between bus node and bus line.

Coupler

The DP/PA coupler connects a PROFIBUS PA segment to a PROFIBUS DP segment. PROFIBUS PA and PROFIBUS DP are coupled to one another in terms of data but are separate in terms of the transmission physics.

DDBF file

All slave-specific properties are stored in a Device Data Base File (DDBF file). The format of the DDBF file is to be found in the PROFIBUS guideline: Specification for PROFIBUS Device Description and Device Integration Vol.1: DDBF V4.1, 07/2001 of the PROFIBUS-Nutzerorganisation (PNO).

Diagnostics

Diagnostics is the detection, localisation, classification, display and further evaluation of errors, faults and messages.

Diagnostics provides monitoring functions that run automatically while the plant is in operation. This increases the availability of plants by reducing commissioning times and downtimes.

DP master

A master that behaves in conformity with IEC 61784-1:2002 Ed1 CP 3/1 is termed a DP master.

DP slave

A slave that is operated on the PROFIBUS bus with the PROFIBUS DP protocol and that behaves in conformity with IEC 61784-1:2002 Ed1 CP 3/1 is termed a DP slave.

DP standard

is the bus protocol of the distributed I/O system in compliance with IEC 61784-1:2002 Ed1 CP 3/1

DPV0

- Cyclical data exchange between the central control system and slaves
- Configuration using DDBF files
- Diagnostics

DPV1

Extension of DPV0:

- Acyclical data exchange between the central control system and slaves
- Integration in engineering systems via EDD or FDT / DTM
- Transferable PLC software function blocks (IEC 61131-3)
- Fail-safe communication (PROFIsafe)
- Interrupts

Electromagnetic compatibility

Electromagnetic compatibility is the capacity of electrical equipment to function faultlessly in a specified environment without affecting the environment in an inadmissible manner.

Equipment, associated

A piece of electrical equipment that contains both intrinsically safe and non-intrinsically safe power circuits and is configured so that the non-intrinsiclly safe power circuits cannot impede the intrinsicaly safe ones.

Equipment, electrical

Components, power circuits or parts of power circuits that are normally to be found in their entirety in a single housing.

Equipment, intrinsically safe, electrical

A piece of electrical equipment in which all power circuits are intrinsically safe.

Equipotential bonding

Electrical connection (equipotential bonding conductor) that brings the bodies of electrical equipment and external conductive bodies to an equal or almost equal potential level to prevent disturbing or dangerous voltages between these bodies.

Field bus

The field bus is a serial bus system for the distributed integration of field devices in an automation system

Floating

Having no conductive connection to ground

Ground

The conductive earth whose electrical potential can be set equal to zero at any point.

Ground refers to the entirety of all interconnected inactive parts of a piece of equipment that cannot possess a dangerous contact voltage, even in the event of a malfunction.

Ground

The conductive earth whose electrical potential can be set equal to zero at any point.

Ground refers to the entirety of all interconnected inactive parts of a piece of equipment that cannot possess a dangerous contact voltage, even in the event of a malfunction.

Ground terminal PE

Name of the connector on electrical equipment used in potentially explosive areas and to which the equipotential bonding system is connected.

Grounding

Grounding means connecting an electrically conductive part to a grounding system by means of the ground electrode.

H system

High availability system consisting of at least two central modules or two separate devices, for example PCs (master / reserve). The user program is processed identically in the master and in ther reserve devices.

HW Config

Integral part of *STEP 7* for configuring hardware.

Identification and maintenance data

Identification data (I data) is information on the module, some of which are printed onto the module housing. I data are for reading only.

Maintenance data (M data) is plant-dependent information such as installation location, installation date etc. M data are created during configuration and written onto the module.

Identification and maintenance data (I&M) is information stored in a module to support you in

- Checking the plant configuration
- Locating hardware modifications in a plant
- Correcting errors in a plant

Modules can be uniquely identified online by means of the I&M data.

Master

When a master is in possession of the token, it can send data to other nodes and request data from other nodes (= active node). DP master are, for example, the CPU 315-2 DP or the IM 308-C.

Parameter assignment

Parameter assignment is the transfer of slave parameters from master to the slave.

PNO

PROFIBUS user organization

Potentially explosive area

Potentially explosive area in which the atomsphere might become explosive (this means that the danger exists potentially).

Power supply unit

A power supply unit supplies power to the field devices and the distributed process I/Os connected to them.

PROFIBUS

PROcess FIeld BUS, process and field bus standard as defined in the field bus standard (IEC 61784-1:2002 Ed1 CPF 3 PROFIBUS and PROFINET). It specifies functional, electrical, and mechanical properties for a bit-serial field bus system.

PROFIBUS is available with the protocols: DP (=distributed I/O) and FMS (= Field bus Message Specification)

PROFIBUS address

For the purpose of unique identification on PROFIBUS°DP, each node must be given a PROFIBUS address.

PC / PD or the ET 200 Handheld have the PROFIBUS address "0".

DP master and DP slaves have a PROFIBUS address from the 1 to 125 range.

PROFIBUS DP

PROFIBUS bus system with the DP protocol. DP stands for the German equivalent of distributed I/O.

PROFIBUS PA

PA stands for Process Automation and increases the range of usage of the PROFIBUS DP family to include the field of process engineering. Process engineering refers to both the intrinsically safe sectors of the chemicals industry and to the non-intrinsically safe sectors, such as nuclear power plant automation, the food industry and waste water technology.

Redundant systems

Redundant systems are characterized by the multiple (redundant) presence of important automation components. If a redundant component fails there the processing of the program is not interrupted.

Reference potential

The potential to which voltages of participating circuits are referenced when they are viewed and/or measured.

Segment

A segent or bus segment is a self-contained section of a serial bus system.

SELV

Safety extra low voltage (SELV) is voltage < AC 30 V / DC 60 V that generates via a safety transformer, accumulator etc.

SIMATIC PDM

SIMATIC PDM (Process Device Manager) is a universal tool that is not manufacturer-specific and is used for configuring, parameterizing, commissioning and diagnosing intelligent process devices. *SIMATIC PDM* makes it possible to configure a large variety of process devices with a single software on a standardized user interface.

Supply unit

A supply unit supplies power to the line.

Terminator resistor

A terminator resistor is a resistor that terminates the data transmission line to avoid reflections.

Time synchronization

Time synchronization ensures that all clocks run synchronously. A master clock distributes the time in a configurable cycle to all other components in the automation system that have a clock. The components use this distributed time to set their own clocks.

TN-S system

In a TN-S system, the neutral conductor (N) and protective conductor (PE) are routed separately from each other. The neutral conductor is connected to the grounded protective conductor at a central point, and only there. The conductor can be grounded any number of times.

Token

In network technology a token refers to a bit pattern that is passed from one bus node to another, enabling that node to access the bus.

Transmission speed

The transmission speed specifies the number of bits transmitted per second.

Type of ignition protection

The special measures applied to electrical equipment to prevent the ignition of a potentially explosive ambient atmosphere.

Update

Following (compatible) functional extensions or improvements to performance you should update the IM 153-2 interface module to the respective most recent firmware version.

Index

A

B

C

D

E

F

G

H

I

L

M

N

O

P

R

S

T

U

V

W

Y

SIEMENS

SIMATIC

Product Information

11/2007

Standards and approvals

This Product Information contains **important information about the manual "Bus links DP/PA coupler, DP/PA link and Y link"** (A5E00193841-16), 10/2006. The Product Information is part of the product supplied and the information in it should be considered more up-to-date if uncertainties arise.

Siemens Aktiengesellschaft A5E01200465-02

1 DP/PA coupler Ex [ia], 6ES7157-0AD82-0XA0; as of product state 2

ATEX Approval

KEMA 03ATEX1416 X

conforming to EN 60079-0 : 2006, EN 60079-11 : 2007, EN 60079-15 : 2005, EN 61241-11 : 2006, EN 60079-26 : 2004 and EN 60079-27 : 2006.

FISCO POWER SUPPLY

Ex II 3 G (1) GD Ex nA [ia] [iaD] IIC T4

⚠ WARNING
Personal injury and material damage can be incurred. In potentially explosive atmospheres, personal injury and material damage can be incurred if plug connections are disconnected during operation. In potentially explosive atmospheres, only disconnect the plug connections of all components when they are not under current.

2 Active field distributors AFD and Splitters AFS

CE Label

The described components meet the requirements and protective aims of the following EC directives and comply with the harmonized European Standards (EN), published for programmable logic controllers (PLC) in the official gazettes of the European Union.

- 73/23/EEC "Electrical Equipment Designed for Use within Certain Voltage Limits" (LowVoltage Directive)
- 89/336/EEC "Electromagnetic Compatibility" (EMC directive)
- 94/9/EC "Equipment and protective systems intended for use in potentially explosive atmospheres" (ATEX)

The EC declarations of conformity are kept available for the responsible authorities at the following address:

Siemens Aktiengesellschaft
Automation & Drives Technology Division
A&D AS RD ST Type Test
P.O. Box 1963
D-92209 Amberg

ATEX Approval

KEMA 02ATEX0268 X
conforming to EN 60079:-15 (Electrical apparatus for potentially explosive atmospheres; Type of protection "n")

Ex II 3 G EEx nA II Tx

⚠ WARNING
Personal injury and material damage can be incurred. In potentially explosive atmospheres, personal injury and material damage can be incurred if plug connections are disconnected during operation. In potentially explosive atmospheres, only disconnect the plug connections of all components when they are not under current.

UL / CSA Approval

Underwriters Laboratories Inc. in accordance with

Ordinary locations

- UL 508 (Industrial Control Equipment)
- CSA C22.2 No. 142 (Process Control Equipment)

Note

Currently valid certifications can be found on the rating of the relevant module.

FM Approval

Factory Mutual Research (FM) in accordance with

Approval Standard Class Number 3611 (2004)

Class I, Division 2, Group A, B, C, D Tx;
Class I, Zone 2, Group IIC Tx

Use in industry

SIMATIC products are designed for industrial applications.

Table 1-1 Use in industry

Area of Application	Requirements in respect of	
	Noise emission	Noise immunity
Industrie	EN 61000-6-4: 2001	EN 61000-6-2: 2001

SIEMENS

SIMATIC

DP/PA Link and Y Link bus links
IM 153-2 Interface Module

Product Information

08/2007
A5E01208363-01

Safety Guidelines

This manual contains notices you have to observe in order to ensure your personal safety, as well as to prevent damage to property. The notices referring to your personal safety are highlighted in the manual by a safety alert symbol, notices referring only to property damage have no safety alert symbol. These notices shown below are graded according to the degree of danger.

⚠ DANGER
indicates that death or severe personal injury **will** result if proper precautions are not taken.

⚠ WARNING
indicates that death or severe personal injury **may** result if proper precautions are not taken.

⚠ CAUTION
with a safety alert symbol, indicates that minor personal injury can result if proper precautions are not taken.

CAUTION
without a safety alert symbol, indicates that property damage can result if proper precautions are not taken.

NOTICE
indicates that an unintended result or situation can occur if the corresponding information is not taken into account.

If more than one degree of danger is present, the warning notice representing the highest degree of danger will be used. A notice warning of injury to persons with a safety alert symbol may also include a warning relating to property damage.

Qualified Personnel

The device/system may only be set up and used in conjunction with this documentation. Commissioning and operation of a device/system may only be performed by **qualified personnel**. Within the context of the safety notes in this documentation qualified persons are defined as persons who are authorized to commission, ground and label devices, systems and circuits in accordance with established safety practices and standards.

Prescribed Usage

Note the following:

⚠ WARNING
This device may only be used for the applications described in the catalog or the technical description and only in connection with devices or components from other manufacturers which have been approved or recommended by Siemens. Correct, reliable operation of the product requires proper transport, storage, positioning and assembly as well as careful operation and maintenance.

Trademarks

All names identified by ® are registered trademarks of the Siemens AG. The remaining trademarks in this publication may be trademarks whose use by third parties for their own purposes could violate the rights of the owner.

Disclaimer of Liability

We have reviewed the contents of this publication to ensure consistency with the hardware and software described. Since variance cannot be precluded entirely, we cannot guarantee full consistency. However, the information in this publication is reviewed regularly and any necessary corrections are included in subsequent editions.

Siemens AG
Automation and Drives
Postfach 48 48
90327 NÜRNBERG
GERMANY

Ordernumber: A5E01208363-01
Ⓟ 08/2007

Table of contents

Introduction 1

1.1 Introduction

Scope

This Product Information supplements the *Bus Links DP/PA Coupler, DP/PA Link and Y Link* Operating Instructions (A5E00193840-16), Edition 10/2006, and describes the new features of the interface modules:

- IM 153-2; order number 6ES7153-2BA02-0XB0
- IM 153-2 (outdoor); order number 6ES7153-2BA82-0XB0

The following information applies equally to both interface modules. If differences exist, the relevant module will be identified explicitly.

Changes compared to the predecessor modules

In comparison to their predecessors (6ES7153-2BAx1-0XB0), the interface modules indicated above contain the following new features:

- Routing of frames of the slave initiative
- The link behavior for commissioning has been improved.

Additional documentation

You will find the following supplementary documentation online at:
http://support.automation.siemens.com/WW/view/en/ with the corresponding entry ID

Name of manual	Description
Operating Instructions Bus Links DP/PA Coupler, DP/PA Link and Y Link **Entry ID:** 1142696	Description; application planning; mounting; connecting; commissioning; operation of the DP/PA Link and Y Link; maintenance and service; functions; interrupt, error, and system messages, technical specifications, basics about PROFIBUS PA
System Manual Principles of Explosion Protection **Entry ID:** 12521844	Product overview, planning, commissioning, repair and maintenance

1.2 Compatibilities

Compatibility with predecessor versions

With regard to properties and features, the IM 153-2BAx2 interface module is fully compatible with its predecessor versions. In addition, the new features indicated above are available.

Description 2

2.1 Routing of frames of the slave initiative

The IM 153-2BAx2 support routing of frames of the slave initiative. In so doing, the frames of devices are passed behind the link to the higher-level controller.

This routing can be used, for example, to operate SINAMICS drives behind the Y Link if the trace function is being used with the STARTER commissioning tool.

2.2 Improved link behavior during commissioning

Starting situation

The IM 153-2BAx2 interface modules are installed in one link and should be operated redundantly in an H System (e.g., SIMATIC S7-400H).

Behavior of IM 153-2BAx2

If the IM 153-2BAx2 detects a redundancy partner that is not ready to be switched to or if there are no lower-level slaves, the interface module stops sending continuous diagnostic messages.

This behavior can also be implemented for the following interface modules by means of a firmware update:

- IM 157 (6ES7157-0AA82-0XA0)
- IM 153-2 (6ES7153-2BAx1-0XB0)

This "new" behavior of the IM 153-2BAx2 is not available for redundancy mode in accordance with the standard.

2.3 Which devices can be operated behind the Y Link?

Slaves at the lower-level DP master system cannot be operated in DPV1 mode unless they have been integrated and configured with GSD rev. ≥ 5.

The GSD must contain the following entries:

- Prm_Block_Structure_supp=1
- PrmCmd_supp=1
- Slave_Redundancy_supp=1

STEP 7 checks these entries during configuration.

If these entries are not found, the slave is then operated in DPV0 mode.

2.4 Operation of the link on an S5 H System

The following details are added to Chapter 11.1.2 of the *Bus Links; DP/PA Coupler, DP/PA Link, and Y Link* Operating Instructions, Edition 10/2006:

S5-115H / -155H as DP master

A redundantly configured link with IM 153-2 can **not** be operated on an S5 H System.

Technical specifications 3

3.1 Technical specifications of the IM 153-2 (6ES7153-2BAx2-0XB0)

Dimensions and weight	
Dimension W x H x D (mm)	40 x 125 x 117
Weight	Approx. 360 g
Module-specific data	
Transmission speed for the higher level DP master system	9.6; 19.2; 45.45; 93.75; 187.5; 500 kBaud 1.5; 3; 6; 12 MBaud
Bus protocol	PROFIBUS DP
Frame length I / O data	Max. 244 bytes
Length of configuration frame	Max. 244 bytes
Length of diagnostic frame	Max. 231 bytes
Length of parameter assignment frame	Max. 223 bytes
suitable for system modifications during operation	Yes
Voltages, currents, potentials	
Rated supply voltage	24 VDC (20.4 V to 28.8 V)
• Polarity reversal protection	Yes
• Power failure bypass	20 ms
Electrical isolation	
• to a high-level DP master system	Yes
• to the DP/PA or Y coupler	No
Insulation tested with	500 VDC
when used in the DP/PA link	
• Power consumption (24 VDC)	Max. 200 mA (at 20.4 V)
• Power loss	Max. 2.6 W (at 28.8 V)
when used in the Y link	
• Power consumption (24 VDC)	Max. 400 mA (at 20.4 V)
• Power loss	Max. 3.6 W (at 28.8 V)

Status, interrupts, diagnostics	
Status display	No
Interrupts	Yes
Diagnostics function	Yes
• Group error	Red LED "SF"
• Bus error on higher level DP master system	Red LED "BF 1"
• Bus error on underlying bus system	Red LED "BF 2"
• IM has an active channel	Yellow LED "ACT"
• Monitoring 24 V power supply	Green "ON" LED
Data for connecting underlying bus components	
DP/PA coupler can be connected	Max. 5
Y coupler can be connected	1
Underlying slaves can be connected	Max. 64
Number of slots in underlying slaves	(244 minus number of PA field devices), but not more than 236