403 030

Lenze

Global Drive

9300 servo inverters

Lenze GmbH & Co KG, Postfach 10 13 52, D-31763 Hameln, Site: Groß Berkel,
Hans-Lenze-Straße 1, D-31855 Aerzen, Telephone ++49 (0) 5154 82-0, Telefax ++49 (0) 5154 82-21 11
E-Mail: Lenze@Lenze.de · Internet: http://www.Lenze.com

Technical alterations reserved · *Printed in Germany 05.99* by ME / LHM · 98/09 GB

Select and order

This catalog helps you to easily select and order your desired servo drive.

This catalog includes:
- Servo inverters for the control of servo motors
- Different servo inverter versions
- Accessories for mounting and wiring of inverters
- Application examples
- Order forms

9300 Automation

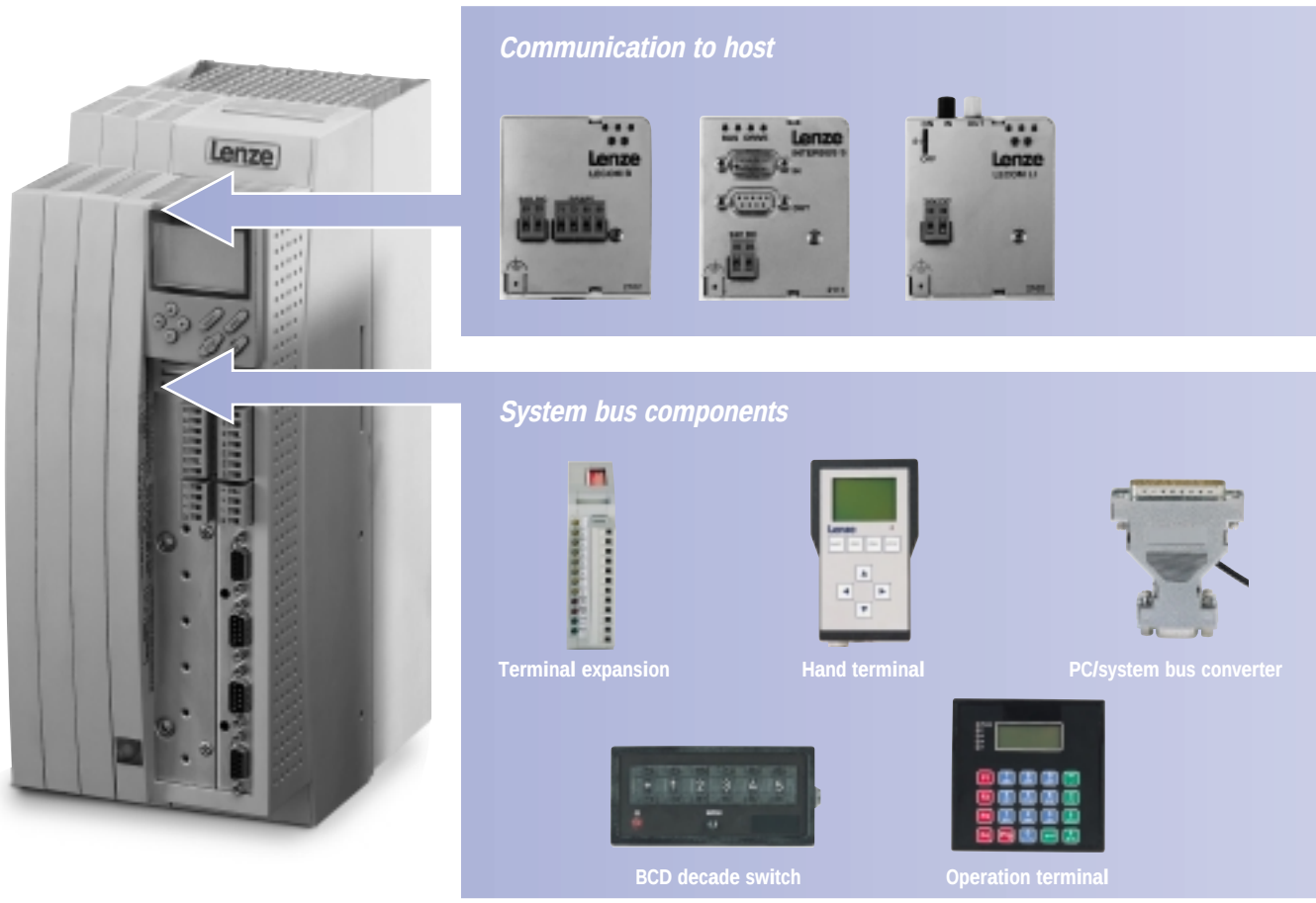

Lenze

9300 servo drive system overview

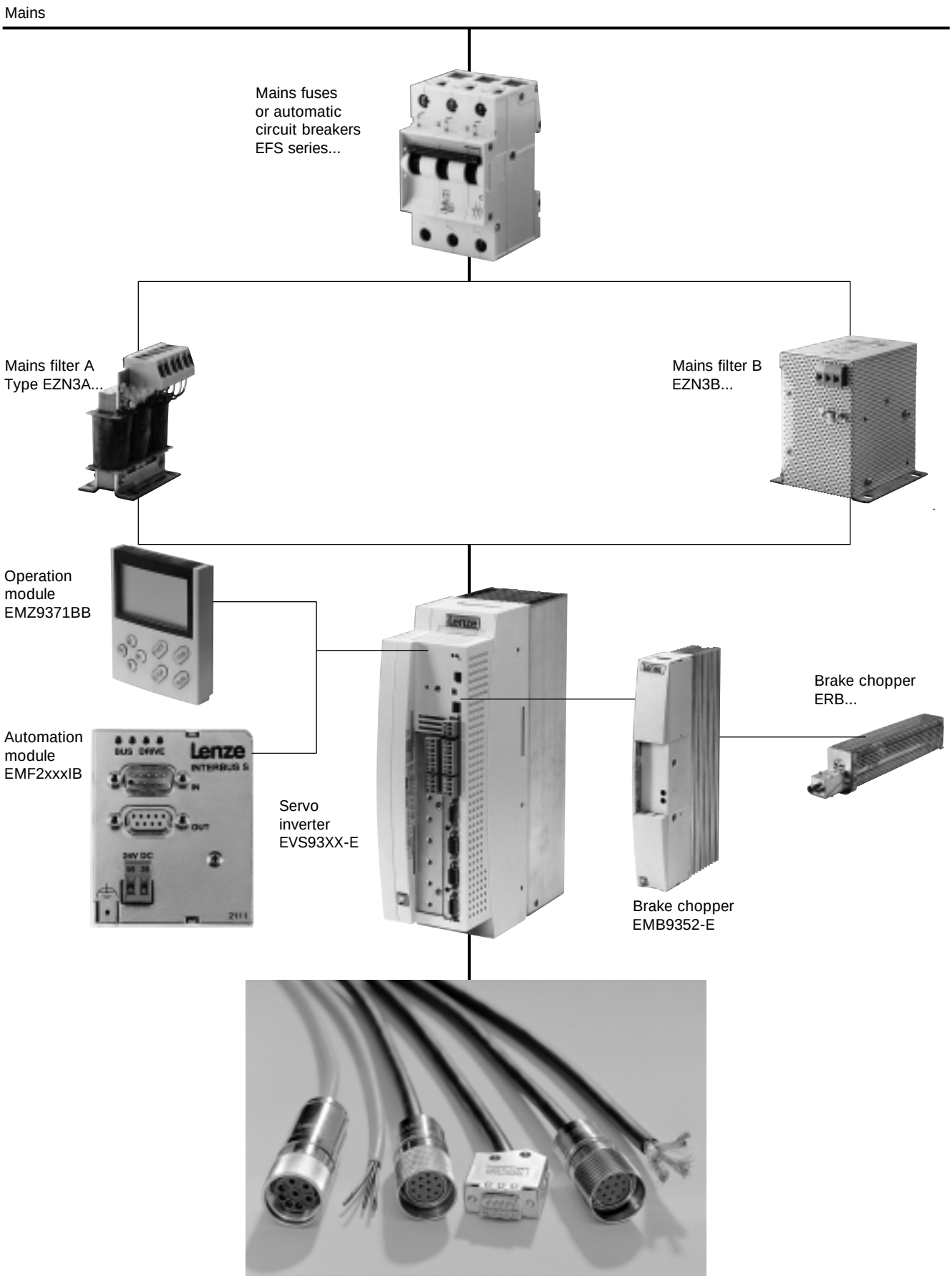

Intelligent drives for automation.

Intelligence is a built-in feature of the Lenze Global Drive controllers. When used in any machine, this is a considerable cost benefit for the design engineer.

Starting with the 8200 Global Drive frequency inverters in series production or HVAC and pump technology, frequently used automation functionality (e. g. PID controllers) has been integrated into the device.

Due to their controller structure - that can be freely interconnected internally - the servo inverters, servo register controllers, 9300 servo positioning controllers cut down on the need for external peripherals. For example, the 9300 servo positioning contoller includes complete positioning control features via software functions. Every device version contains technology functions that can, for example, execute subprocesses. Additional control elements of the system can be evaluated by means of control inputs and outputs as well as via the system bus.

Intelligent drives have a name: Global Drive.

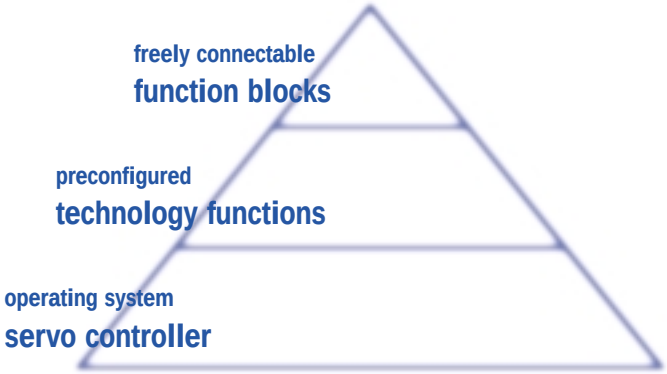

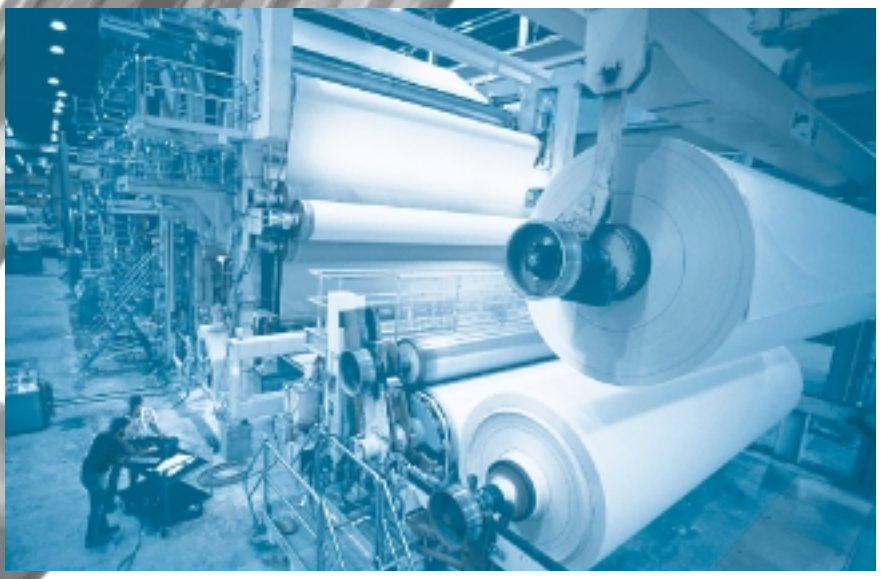

List of abbreviations

Abbreviations used in this catalog

Controllers

V_{Mains}	[V]	Mains voltage
I_{Mains}	[A]	Mains current
V_G	[V]	DC bus voltage
I_r	[A]	Rated current / Output current
I_{max}	[A]	Maximum output current
P_r	[kW]	Rated motor power
S_r	[kVA]	Inverter output power
P_{loss}	[W]	Inverter power loss
f_{ch}	[kHz]	Chopping frequency
f_{max}	[Hz]	Set maximum frequency
f_d	[Hz]	Field frequency
L	[mH]	Inductance
R	[?]	Resistance

General

93xxE	9321 to 9332E types
934xE	9341 to 9343E types
935xE	9351 to 9352E types
AC	AC current/voltage
DC	DC current/voltage
DIN	Deutsches Institut für Normung (German Standardization Authority)
EMC	Electromagnetic Compatibility
EN	Europäische Norm (European Standard)
IEC	International Electrotechnical Commission
IP	International Protection Code
NEMA	National Electrical Manufacturers Association
VDE	Verband deutscher Elektrotechniker Association of German Electrical Engineers
CE	Communauté Européene
IM	International Mounting Code

Contents

Product information

Survey 9
Integrated technologies 10
Inverters for your applications 11
General 9300 product information 12

Order information

Drive selection step-by-step 15
Drive selection 16

93xx selection

Features 18

General data 20
Technical data 9321-9325 21
Technical data 9326-9329 22
Technical data 9330-9332 23

Mechanical installation
- General notes 24
- Mounting with fixing rail 25
- Thermal separation 26

Cable protection
- Survey 27
- Cable-protecting fuses 28
- Automatic circuit breakers 29

CE-typical installation
- General notes 30
- Mains filter A 32
- Mains filter B 36

Braking operations
- Options 40
- 9351 Brake module 41
- 9352 Brake module 42
- Brake resistors 44

Regenerative power supply module
- General data 46
- Mains filter A 48
- DC bus fuses 49
- DC bus connection 50

Operation module
- 9371 Operation module 51

Other accessories
- System bus components 52
- Digital display / Setpoint potentiometer 54

Communication via host
- Networking using RS 232/485 56
- High-speed networking via host 56

Survey of the accessories
- Accessories for 9300 servo inverters 57
- Assigned accessories for 9321-9328 servo inverters 58
- Assigned accessories for 9329-9332 servo inverters 59
- Assigned accessories for regenerative power supply modules 59

System cables
- General 61
- Motor cable 62
- Blower cable 64
- Resolver- / Encoder cable 65
- Other system cables 66

Application examples

Connecting diagrams
- Power connection 67
- Control connection 68
- DC-bus connection 69

Order forms

70/71

Lenze worldwide

72/73

9300 servo inverters - flexible and modern automation

Servo inverters of the 9300 series with a matching motor and geared motor programme form a perfect drive system. Market-oriented intelligence enables general technology functions (electrical shaft or positioning control) as well as electronic alternatives to mechanical components (register control, cam profiler).
Thus, costly upgrades with control cams, pull rods, and also clutches are not necessary in the manufacturing process.
These intelligent drives coordinate - accurately and precisely - all different movements of the machines to one another. No matter whether the system is equipped with a central control station or is controlled locally - high flexibility is guaranteed.

This drive concept offers automation solutions based on a consistent platform.
Attachable InterBus and PROFIBUS fieldbus modules are available for the connection to a host control system.
The hardware of the servo product series is uniformly equipped with the following features:
Universality - the product series is universally applicable in the power range from 0.37 to 75 kW.
Integrated mains input - for single drive operations only one element instead of two separated elements is required.
Regenerative power supply modules - ensure energy-saving group applications and multi-axis applications.
Feedback systems - ensure a perfect adaptation to the machine requirements by means of resolvers or SinCos feedback.

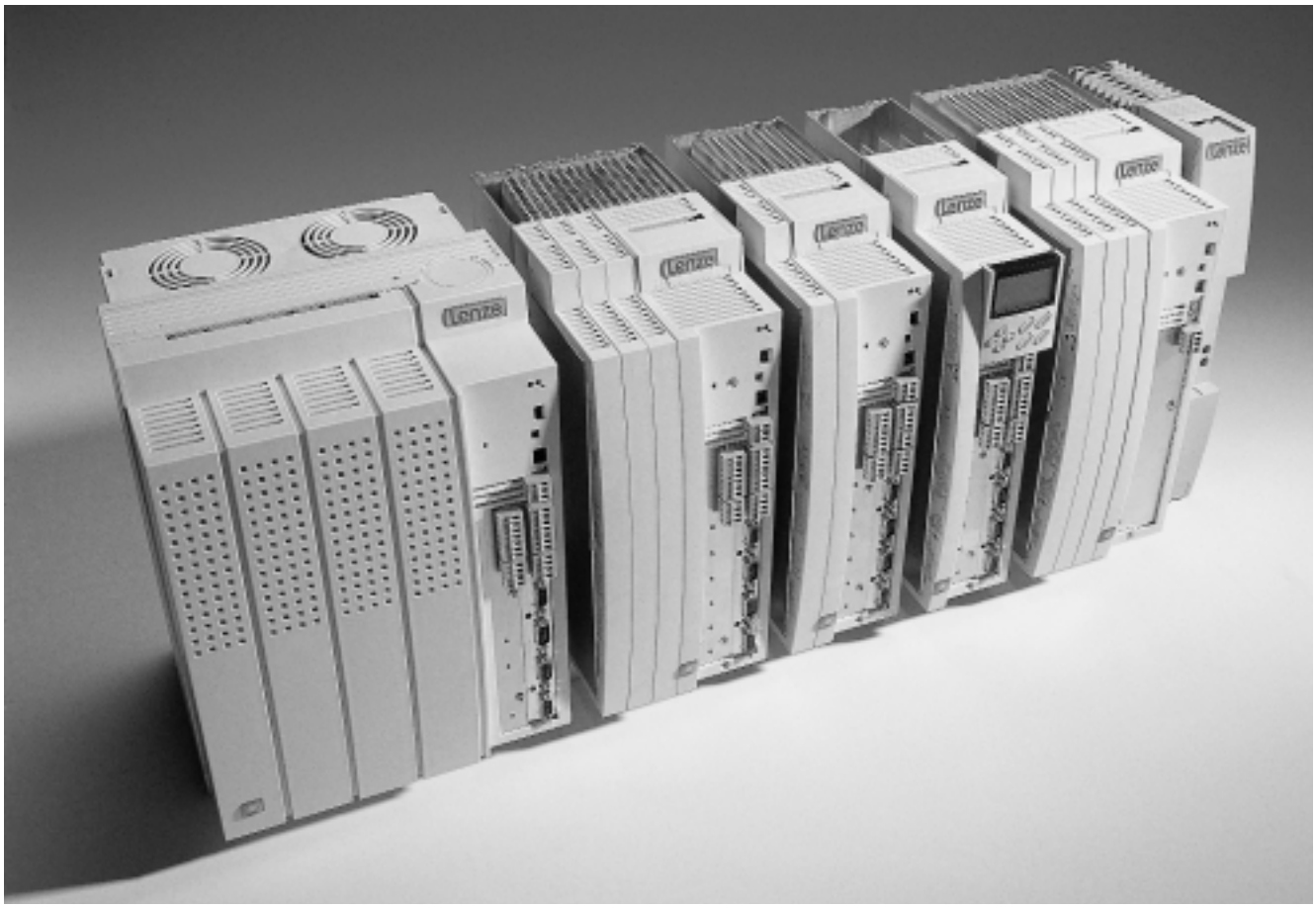

Integrated technologies

The integrated technology function forms a vital part of the intelligent drive solution. The 9300 servo inverter series comprise four software variants in identical hardware devices:

- 9300 servo
- 9300 register control
- 9300 cam profiler
- 9300 positioning control

All four variants are equipped with a uniform user interface. The respective technology function can be set quickly and easily. In detail:

9300 inverter

This inverter implements frequently used functions of a servo drive. The electronic gearbox is an essential technology function in this device. As an alternative to the mechanical vertical shaft, several drives can be operated at exact synchronisation by master frequency preselection. Proportional synchronisation can be implemented easily and flexibly by means of adjustable gearing. Feedback systems such as resolvers or SinCos encoders provide highest precision.

9300 register control

There are many machines that are processing material lengths. Second printings, cuts, perforations, embossings, or splices require the material length to be positioned precisely to form the resulting print image. However, due to process-dependant fluctuations (material characteristics, production parameters) the position of the print image tends to drift. The basic prerequisite "autosyn" is added by the requirement for overlaid register alignment of the rotative motion at the print image. The register control already integrated in the servo inverter always re-aligns the angular position of draw-in rollers, printing cylinders, or other processing stations with the print image. Thus, second printings, cuts, perforations, embossings, or splices will always be at the required position. Finally, drift errors are a thing of the past. Even without host control and without overlay gearing.

9300 cam profiler

Mechanical cams can be found quite frequently in production machinery. Changing or modifying the product causes lengthy and complicated set-up procedures.
The 9300 servo cam profiler can store up to 8 different cam profiles, so that cam profiles can be switched without delay during production. For a multitude of potential applications of the cam profiler a variety of additional functions have been integrated, e. g. electronic cam switches and marker-controlled cam start. Especially for opening and closing of welding bars a function has been integrated in order to achieve constant welding periods at variable clock frequencies.

9300 positioning control

Positioning made deceptively simple. The 9300 positioning control includes a complete position controller with sequence control. Easy commissioning with only few input values is a modern solution as compared with external position controllers and their complicated programming language. Responses from limit switches or other drives can be evaluated at the same time. If the initial position of the product is tainted with considerable tolerances, the target position is reliably found by automatic material correction.

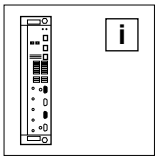

This catalog lists inverters for respective applications. Functions and features of the inverters have been adapted to market requirements.

For the 9300 series the software loaded decides on the available functionality. The following categories are available:

	Printing machines, textile machines, packaging machines	Printing machines, paper machines, packaging, foil processing and textile machines	Packaging machines, production machines, printing machines	Packaging machines, wood processing, warehouse technology
Requirement	High response and comprehensive applications	Insetting, printing, cutting, embossing, perforating, material requirements	Profiling, filling different goods (profile changes)	Exact position-ing and comprehensive applications
Single-phase	-	-	-	-
Three-phase	9321-9332 servo	9321-9332 register control	9321-9332 cam disc	9321-9332 positioning control

Compact design	●	●	●	●
Short-circuit protection	●	●	●	●
Vector control	●	●	●	●
Bipolar setpoint	●	●	●	●
Freely assignable inputs and outputs	●	●	●	●
Error signal output	●	●	●	●
DC brake system	●	●	●	●
slip compensation	●	●	●	●
Mains failure monitoring	●	●	●	●
Digital frequency input	●	●	●	●
Sensorless speed control	●			●
Relative/Absolute positioning				●
Homing	●		●	●
Point-to-point positioning				●
Register control		●		
Teach-in for significant web marker		●		
Time or path based generation of correcting variable		●		
Eight selectable profiles			●	
Cam switchgear, switch points			●	●

Matched system
- Servo inverters with matched servo motors (asynchronous, synchronous)
- Regenerative power supply modules
- Accessories for braking
- Cold Plate variants for special applications.

Intelligent drive controller
Ability to execute complete processes or subprocesses through integrated technology and control functionality.

Easy operation
The 9300 servo inverters can be parameterized using an operation module. This operation module serves as display and for diagnostics.
Alternatively, you can use the Global Drive Control operating software.

Consistency
Across the entire range, the controllers are consistent in
power
operation
networking.

CE conformity
The servo inverters of the 9300 series naturally meet the EC Directives:
- CE conformity according to the Low-Voltage Directive
- CE conformity according to the Directive of Electromagnetic Compatibility for a typical drive configuration with frequency converter.

UL approved
The global application of these controllers is ensured by a UL approval.
UL 508 and UL-508c ensure the application in the US.

Communicating
Networks to the most common fieldbus systems are possible:

-	LECOM A/B:	Networking via RS232/485 interface
-	LECOM LI	Networking via fibre optics
-	InterBus-S:	Connection to the remote bus using DRIVECOM profile 21
-	System bus (CAN):	Connection to I/O terminals as well as several inverters to each other.
-	PROFIBUS:	Communication via PROFIBUS-DP.

Flexibility
The inverters are equipped for all the different requirements of servo technology, i. e you can choose among the suitable technique according to your application.

Integrated mains input
For single drive operations only one element instead of two separate elements is required.

Regenerative power supply modules
They ensure energy-saving group applications and multi-axis applications.

Feedback systems
They ensure a perfect adaptation to the machine requirements. You can select among resolver, TTL encoder, or SinCos encoder.

Considerably reduced controller requirements because of high functionality:
- Digital frequency for synchronous running by means of simple plug connectors
- Integrated position controller for exact positioning
- Vector control for highly dynamic response and high starting torque
- Modular design of freely assignable control and function blocks for easy connection
- Process control and arithmetic blocks for control tasks
- Integrated system for interconnection of several controllers.

The most suitable setpoint source for each application:
- Via setpoint potentiometer to the control terminals
- Via master voltage or master current to the control terminals
- Via the operation module at the frequency inverter
- Via a networking module directly from a host

Energy-saving
The power supply is adapted to the load so that only as much energy as required for the momentary torque / current is consumed.

Space-saving
Thanks to their book-shelf design, the frequency inverters can be installed particularly space-saving in the control cabinet, without having to provide free space. Comprehensive mounting accessories allow diverse mounting positions.

Motors can be adapted
The modular design of the motors and planned variants facilitate the right selection for the individual application:
Servo motor flanges with through-holes in B5 mounting or with threaded holes in B14 mounting.
Different encoders that can be integrated allow the adaptation to the required precision:
- Resolvers as standard solution
- Optimum behaviour thanks to internal improvement of the resolver accuracy
- Incremental encoders or SinCos absolute value encoders can also be used for special applications.

The following chapters of this catalog help you to a tailor-made servo drive for your machinery. Please enter your choice in the order form.	
⇨ This section provides detailed information	**Example:**
1. Select 93XX-E controller type (⇨ Selection, technical data) Select the controller and the servo motor for your drive. The controller type depends on the required motor power.	• Servo drive for 11.0 kW motor EVS9326-E
2. Determine the way of installation (⇨ Selection, mechanical installation) Select the accessories for the installation of the servo inverter.	• Control cabinet in IP41 enclosure • Heat sink is separated, therefore a smaller controller cabinet can be used Frame for thermal separation EJ0038
3. Select accessories at the mains side (⇨ Selection, electrical installation at the mains side) Select suitable fuses and accessories required to comply with the limit classes prescribed by the European legislation.	• Connection of the drive: to an industrial mains • RFI suppression: The ambiance requires limit value class A according to EN 55011 Mains filter EZN3A0150H024
4. Select other accessories for the controller (⇨ Selection, other accessories) Select useful accessories for the controller: - Operation module - Automation accessories - Setpoint potentiometer - System cable	• For analog setpoint input via master voltage or master current: Setpoint potentiometer ERPD001k0001W Scale for potentiometer ERZ0002 Knob for potentiometer ERZ0001 • If you want to change the factory settings in a simple and convenient way: Operation module EMZ9371BB

1. Motor size and blower type

⇨ Technical data, detailed selection in Lenze formulary

- Determine maximum torque M_{max}, maximum speed n_{max}, effective torque M_{rms}, and gear ratio i, if necessary

Gear ratio:
- for **optimum dynamic response**

$$i \approx \sqrt{\frac{J_{load}}{J_{motor}}}$$

- for good utilization ratio for **continuous duty**

$$i \approx \frac{n_r}{n_{load}}$$

Effective torque:

$$M_{rms} = \sqrt{\frac{1}{T}\sum_i M_i^2 t_i}$$

Maximum torque:

$$M_{max} = M_{accel} + \frac{1}{i}\frac{1}{\eta_{gear}} M_{load}$$

$$M_{accel} = 2 \cdot \pi \frac{\Delta n}{\Delta t}\left(J_{motor} + \frac{1}{i^2} J_{load}\right)$$

Select motor according to $\mathbf{n_{max}}$, $\mathbf{M_r > M_{rms}}$ and take into consideration:

- **No air stream** allowed at process → Motor without blower MDSK
- **Fluff** or similar material that may clog air ducts → Motor without blower MDSK
- **High protection rating** required → Motor without blower MDSK
- **High dynamic response** required → Motor with blower MDFK, → Synchronous servo motor MDXKS
- Operation with **constant power** at high speeds (field weakening operation) → Asynchronous servo motor MDXKA
- Very high **power density** → Synchronous servo motor MDXKS
- **Parallel operation** of servo motors at one single inverter → Asynchronous servo motors MDXKA

Example: MDFKA 080-22, 120 Hz
Asynchronous servo motor with external blower,
3.9 kW, 10.8 Nm, 3455 rpm

2. Selecting the encoder

Encoder	Resolver	Single-turn SinCos encoder	Multi-turn SinCos encoder
available for			
Synchronous servo motor MDXKS	•	•	•
Asynchronous servo motor MDXKA, surface-cooled	•	•	•
Asynchronous servo motor MDXKA, enclosed-ventilated	•	•	•
Abbreviation	RS	AS512	AM512
Type		SCS 70	SCM 70
Signals		512 periods, sine wave signals 1 Vpp	512 periods, sine wave signals 1 Vpp
Resolution	0.8 ′	0.4 ′	0.4 ′
Accuracy	± 10 ′ resp. ± 4 ′ for correction code input	± 0.8 ′	± 0.8 ′
Absolute positioning	1 turn	1 turn	4096 turns
Comments	**Standard solution** for most applications	Uses SinCos encoder instead of resolver, actual position via 9300 interface, operation only possible when encoder at 9300 has been selected, (encoder type and supply voltage) values have been stored, and controller has been switched off and on	

Features

Compact servos and position controllers for single-phase mains connection:

	Servo EVS93XX-ES 0.37-75.0 kW	Position controller EVS93XX-EP 0.37-75.0 kW
Single axis in narrow design	●	●
Heatsink can be separated	●	●
Power connection at the top	●	●
Motor connection at the bottom	●	●
Direct connection of resolver and encoder, TTL or SinCos	●	●
Phase controller can be integrated	●	●
Motor-phase monitoring for asynchronous motor	●	●
Mains failure monitoring	●	●
Field-oriented control	●	●
Sensorless speed control (SSC technology)	●	●
Digital synchronization system via digital frequency	●	●
Integrated digital-frequency input and output	●	●
User configuration	●	●
Modular function blocks	●	●
Process controller and arithmetic blocks	●	●
Integrated system bus interface (CAN)	●	●
UL approval, file no. 132659 (listed)	●	●
Point-to-point positioning with/without overshooting		●
Easy programming via 32 program sets (PS) and variable tables (VT)		●
Relative / absolute positioning		●
Direct evaluation of a SinCos absolute value encoder	●	●
Switch the outputs, query the inputs		●
Set reference and actual position value		●
Initiate program branches depending on digital input		●
Initiate program branches depending on piece counter		●
Touch-probe positioning		●
Manual positioning		●
Switching points		●
Switching points dynamically adjustable		●
sin^2 ramps		●
Acceptance of new drive profile parameters during ongoing positioning procedure		●
Override (speed and acceleration)		●
Hand teach-in		●
Arithmetic linking of target positions		●
Manual positioning with intermediate stop		●
PFB actual position actual value storage by touch-probe		●
Freely assignable input variables for analog, binary, and BCD values		●
Standby operation, switch-over from positioning to phase-synchronous running		●
Can-bus synchronization of the position controller		●
Various function blocks for long value arithmetic and signal type conversion		●

Attachable accessories		
Operation module 9371BB for parameterization and parameter transfer	●	●
Serial RS232/485 module via wire or 2102IB fibre optics	●	●
2111IB InterBus-S module	●	●
2131IB PROFIBUS module	●	●

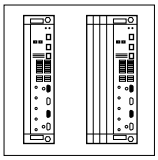

Compact register controllers and cam profilers for three-phase mains connection:

	Register controller EVS93XX-ER 0.37-75.0 kW	Cam profiler EVS93XX-EK 0.37-75.0 kW
Single axis in narrow design	●	●
Heatsink can be separated	●	●
Power connection at the top	●	●
Motor connection at the bottom	●	●
Direct connection of resolver and encoder, TTL or SinCos	●	●
Phase controller can be integrated	●	●
Motor-phase monitoring for asynchronous motor	●	●
Mains failure monitoring	●	●
Field-oriented control	●	●
Sensorless speed control (SSC technology)	●	●
Digital synchronization system via digital frequency	●	●
Integrated digital-frequency input and output	●	●
User configuration	●	●
Modular function blocks	●	●
Process controller and arithmetic blocks	●	●
Integrated system bus interface (CAN)	●	●
UL approval, file no. 132659 (listed)	●	●
Direct evaluation of SinCos absolute value encoders	●	●
Register correction during running	●	
Integrated servo controller for gear ratio compensation	●	
Teach-in function for determination of significant web mark	●	
Adjustable window for marker detection	●	
Mark sensor monitoring	●	
Dead time compensation of sensor system	●	
Adaptable controller characteristics	●	
Preselection of product data in mm or inch (time- and path-dependant)	●	
Variable correction variable limiting	●	
Eight profiles stored in the controller		●
Integrated cam switch		●
Throw-in / throw-out		●
Stretching / compression of cam		●
Offset in x and y direction		●
Virtual master		●
Welding bar control		●
Cam profile start by external signal		●

Attachable accessories		
Operation module 9371BB for parameterization and parameter transfer	●	●
Serial RS232/485 module via wire or 2102IB fibre optics	●	●
2111IB InterBus-S module	●	●
2131IB PROFIBUS module	●	●

General data

Range	Values
Vibration resistance	Germanischer Lloyd, general conditions
Humidity	Humidity class F without condensation (average relative humidity 85 %)
Permissible temperature ranges	during transport of the controller: -25 °C ... +70 °C during storage of the controller: -25 °C ... +55 °C during operation of the controller: 0 °C ... +40 °C +40 °C ... +50 °C with power derating 2.5 % per K
Permissible installation height h	up to 1000m a.m.s.l. without power derating 1000 m a.m.s.l. ... 4000 m a.m.s.l. 5 % / 1000 m
Degree of pollution	VDE 0110 part 2 pollution degree 2
Noise emission	Requirements to EN 50081-1, EN 50081-2, IEC 22G-WG4 (Cv) 21 Limit value class A to EN 55011 (industrial area) with mains filter Limit value class B to EN 55022 (residential area) with mains filter and installation into control cabinet
Noise immunity	Limit values maintained using mains filter. Requirements to EN 50082-2, IEC 22G-WG4 (Cv) 21. **Requirements** / **Standard** / **Severity levels** ESD / EN61000-4-2 / 3, d. h. 8 kV for air discharge and 6 kV for contact discharge RF interference (enclosure) / EN61000-4-3 / 3, i. e. 10 V/m; 27 to 1000 MHz Burst / EN61000-4-4 / 3/4, i. e. 2 kV/5 kHz Surge (on mains cable) / IEC 1000-4-5 / 3, i. e. 1.2/50 ms 1 kV phase-to-phase, 2 kV Phase-PE
Dielectric strength	Surge strength class III according to VDE 0110
Packaging	according to DIN 4180 - 9321 to 9326: packaging for protection against dust - 9327 to 9332: packaging ready for dispatch
Type of protection	IP20 IP41 on the heatsink side for thermal separation in push-through technique NEMA 1: Protection against contact
Approvals	CE: Low-Voltage Directive UL 508: Industrial Control Equipment UL 508C: Power Conversion Equipment

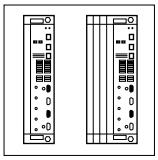

Type		9321	9322	9323	9324	9325
Servo order No.		**EVS9321-ES**	**EVS9322-ES**	**EVS9323-ES**	**EVS9324-ES**	**EVS9325-ES**
Register control order No.		**EVS9321-ER**	**EVS9322-ER**	**EVS9323-ER**	**EVS9324-ER**	**EVS9325-ER**
Cam disc order No.		**EVS9321-EK**	**EVS9322-EK**	**EVS9323-EK**	**EVS9324-EK**	**EVS9325-EK**
Position controller order No.		**EVS9321-EP**	**EVS9322-EP**	**EVS9323-EP**	**EVS9324-EP**	**EVS9325-EP**
Mains voltage	V_r [V]	320 V ... 528 V ± 0 % ; 45 Hz ... 65 Hz ± 0%				
Alternative DC supply	VG [V]	460 V ... 740 V +/-0%				
Ratings for operation at a mains: 3 AC / 400 V / 50 Hz / 60 Hz						
Motor power (4-pole ASM)	P_r [kW]	0.37	0.75	1.5	3.0	5.5
Output current (8 kHz)	I_{r8} [A]	1.5 / 1.05[1)]	2.5 / 1.7[1)]	3.9 / 2.6[1)]	7.0 / 4.7[1)]	13.0
Output current (16 kHz)	I_{r16} [A]	1.1 / 0.77[1)]	1.8 / 1.26[1)]	2.9 / 2.03[1)]	5.2 / 3.64[1)]	9.7
Output power	S_{r8} [kVA]	1.0	1.7	2.7	4.8	9.0
Ratings for operation at a mains: 3 AC / 480 V / 50 Hz / 60 Hz						
Motor power (4-pole ASM)	P_r [kW]	0.37	0.75	1.5	3.0	5.5
Output current (8 kHz)	I_{r8} [A]	1.5 / 1.05[1)]	2.5 / 1.7[1)]	3.9 / 2.6[1)]	7.0 / 4.7[1)]	13.0
Output current (16 kHz)	I_{r16} [A]	1.1 / 0.77[1)]	1.8 / 1.26[1)]	2.9 / 2.03[1)]	5.2 / 3.64[1)]	9.7
Output power	S_{r8} [kVA]	1.2	2.1	3.2	5.8	10.8
Max. output current at 8 kHz	I_{max}	2.3 / 3.0[1)]	3.8 / 5.0[1)]	5.9 / 7.8[1)]	10.5 / 14[1)]	19.5
Max. output current at 16 kHz	I_{max}	1.65 / 2.2[1)]	2.7 / 3.6[1)]	4.4 / 5.8[1)]	7.8 / 10.4[1)]	14.6
Mains current at V_{mains} 400 V	I_r [A]	1.5	2.5	3.9	7.0	12.0
Motor voltage	V_M [V]	3 ~ 0 ... V_{mains}				
Power loss at V_{mains} 400 V	P_{loss} [W]	100	110	140	200	260
Power derating	[%/K] [%/m]	40 °C < T_{amb} < 50 °C: 2%/K 1000 m a.m.s.l. ... 4000 m a.m.s.l.: 5 % / 1000m				
Dimensions a b e	[mm]	 78 x 350 x 250 x	 78 x 350 x 250 x	 97 x 350 x 250 x	 97 x 350 x 250 x	 135 x 350 x 250 x
Weight	m [kg]	3.5	3.5	5.0	5.0	7.5

1) Acceleration drive operating mode

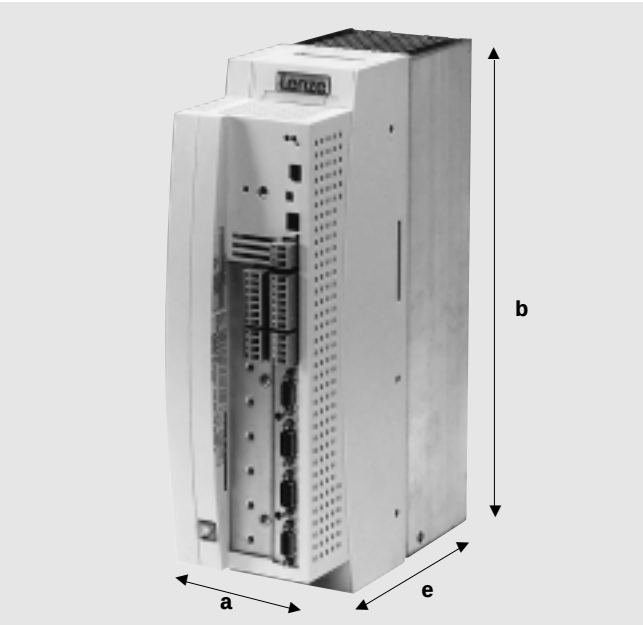

Ratings

Type		9326	9327	9328	9329
Servo order No.		**EVS9326-ES**	**EVS9327-ES**	**EVS9328-ES**	**EVS9329-ES**
Register control order No.		**EVS9326-ER**	**EVS9327-ER**	**EVS9328-ER**	**EVS9329-ER**
Cam disc order No.		**EVS9326-EK**	**EVS9327-EK**	**EVS9328-EK**	**EVS9329-EK**
Position controller order No.		**EVS9326-EP**	**EVS9327-EP**	**EVS9328-EP**	**EVS9329-EP**
Mains voltage	V_r [V]	320 V ... 528 V ± 0 % ; 45 Hz ... 65 Hz ± 0%			
Alternative DC supply	VG [V]	460 V ... 740 V +/-0%			
Ratings for operation at a mains: 3 AC / 400 V / 50 Hz / 60 Hz					
Motor power (4-pole ASM)	P_r [kW]	11.0	15.0	22.0	30.0
Output current at 8 kHz	I_{r8} [A]	23.5	32.0	47.0	59.0
Output current at 16 kHz	I_{r16} [A]	15.3	20.8	30.6	38.0
Output power	S_r [kVA]	16.3	22.2	32.6	40.9
Ratings for operation at a mains: 3 AC / 480 V / 50 Hz / 60 Hz					
Motor power (4-pole ASM)	P_r [kW]	11.0	18.5	30.0	37.0
Output current at 8 kHz	I_{r8} [A]	22.3	30.4	44.7	56.0
Output current at 16 kHz	I_{r16} [A]	14.5	19.2	28.2	35.0
Output power	S_r [kVA]	18.5	25.0	37.0	46.6
Max. output current at 8 kHz	I_{max}	35.3	48.0	70.5	88.5
Max. output current at 16 kHz	I_{max}	22.9	31.2	45.9	57
Mains current at V_{mains} 400 V	I_r [A]	20.5	27.0	44.0	53.0
Motor voltage	V_M [V]	3 ~ 0 ... V_{mains}			
Power loss at V_{mains} 400 V	P_{loss} [W]	360	430	640	810
Power derating	[%/K] [%/m]	40 °C < T_{amb}< 50 °C: 2%/K 1000 m a.m.s.l. ... 4000 m a.m.s.l.: 5 % / 1000m			
Dimensions a b e	[mm]	 135 x 350 x 250	 250 x 350 x 250	 250 x 350 x 250	 250 x 350 x 250
Weight	m [kg]	7.5	12.5	12.5	12.5

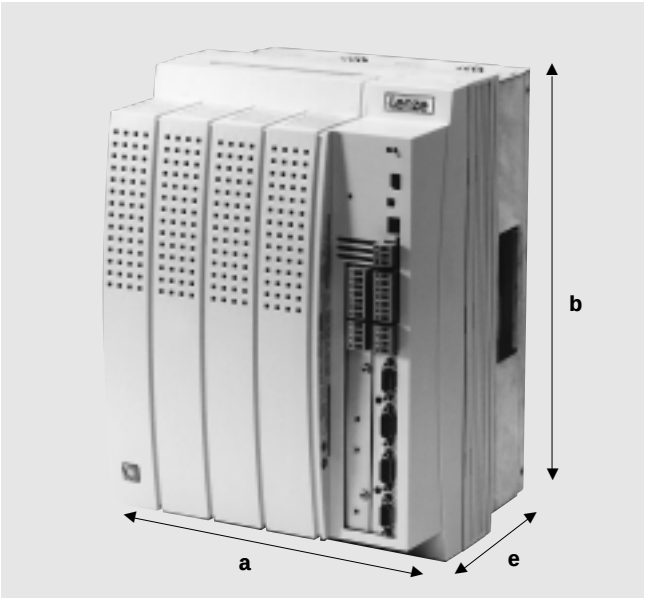

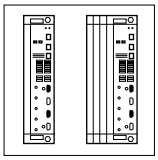

Type		9330	9331	9332
Servo order No.		**EVS9330-ES**	**EVS9331-ES**	**EVS9332-ES**
Register control order No.		**EVS9330-ER**	**EVS9331-ER**	**EVS9332-ER**
Cam disc order No.		**EVS9330-EK**	**EVS9331-EK**	**EVS9332-EK**
Position controller order No.		**EVS9330-EP**	**EVS9331-EP**	**EVS9332-EP**
Mains voltage	V_r [V]	320 V ... 528 V ± 0 % ; 45 Hz ... 65 Hz ± 0%		
Alternative DC supply	VG [V]	460 V ... 740 V +/-0%		
Ratings for operation at a mains: 3 AC / 400 V / 50 Hz / 60 Hz				
Motor power (4-pole ASM)	P_r [kW]	45.0	55.0	75.0
Output current at 8 kHz	I_{r8} [A]	89.0	110.0	145.0
Output current at 16 kHz	I_{r16} [A]	58.0	70.0	90.0
Output power	S_r [kVA]	51.5	76.2	100.9
Ratings for operation at a mains: 3 AC / 480 V / 50 Hz / 60 Hz				
Motor power (4-pole ASM)	P_r [kW]	45.0	55.0	90.0
Output current at 8 kHz	I_{r8} [A]	84.0	105.0	125.0
Output current at 16 kHz	I_{r16} [A]	55.0	65.0	80.0
Output power	S_r [kVA]	69.8	87.8	104.0
Max. output current at 8 kHz	I_{max}	133.5	165.0	225.0
Max. output current at 16 kHz	I_{max}	87	105	135
Mains current at V_{mains} 400 V	I_r [A]	78.0	96.4	129.1
Motor voltage	V_M [V]	3 ~ 0 ... V_{mains}		
Power loss at V_{mains} 400 V	P_{loss} [W]	1100	1470	1960
Power derating	[%/K] [%/m]	40 °C < T T_{amb} < 50 °C: 2%/K 1000 m a.m.s.l. ... 4000 m a.m.s.l.: 5 % / 1000m		
Dimensions a b e	[mm]	 340 x 591 x 285	 440 x 680 x 285	 440 x 680 x 285
Weight	m [kg]	36.5	59.0	59.0

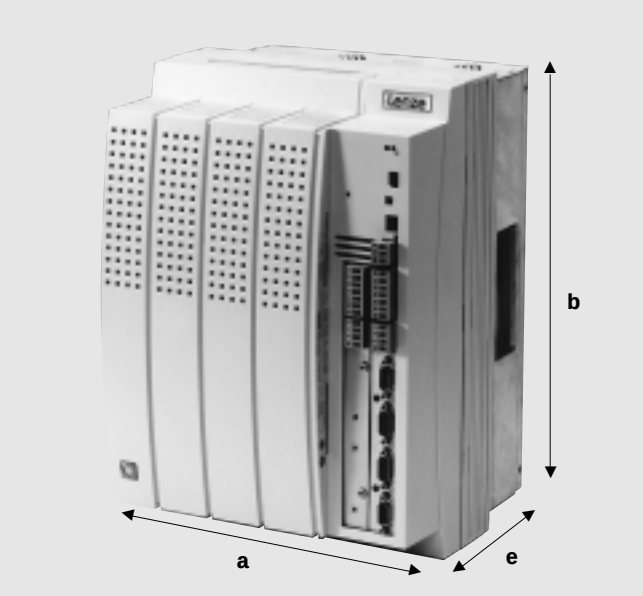

Mechanical installation of 9300 servos

General notes

- Inverters must only be used as built-in units!
- If the exhaust air contains pollutants (dust, fluff, grease, aggressive gases) ensure sufficient measures (e.g. installation of filters, periodic cleaning, etc.)
- Ensure free spaces
  When installing several inverters in one control cabinet they can be fixed side by side.
  Ensure unimpeded air circulation.
  Ensure a free space of 100 mm at top and bottom
- In the event of continuous vibrations or shocks:
  Check the application of shock absorbers.

The servo inverters of the 9300 series can be installed in a control cabinet as follows:

Using the **mounting rails** included or
using **thermal separation**

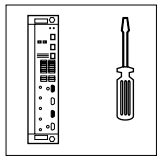

Installation with fixing rail

The controllers are supplied with a fixing rail which can be used to mount the servo inverter onto the rear panel of a control cabinet or onto a mounting plate. The mounting rail is fixed in a rail at the controller so that fixing brackets are available at top and bottom.

Alternatively, **thermal separation** is possible.

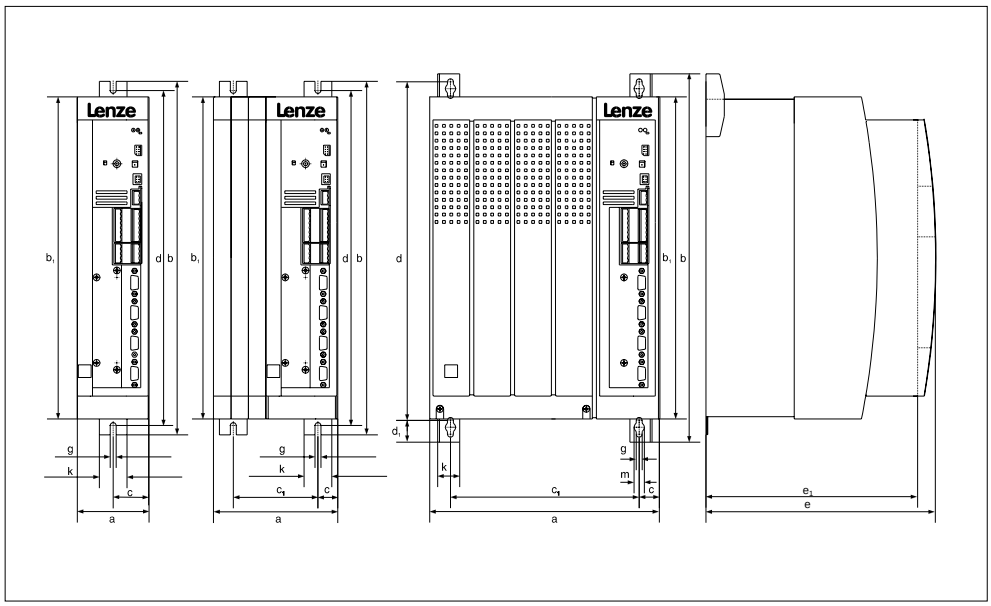

Controller	a [mm]	b [mm]	b1 [mm]	c [mm]	c1 [mm]	d [mm]	d1 [mm]	e [mm]	e1 [mm]	g [mm]	k [mm]	m [mm]
9321	78	384	350	39	-	365	-	250	230	6.5	30	-
9322	78	384	350	39	-	365	-	250	230	6.5	30	-
9323	97	384	350	48.5	-	365	-	250	230	6.5	30	-
9324	97	384	350	48.5	-	365	-	250	230	6.5	30	-
9325	135	384	350	21.5	92	365	-	250	230	6.5	30	-
9326	135	384	350	21.5	92	365	-	250	230	6.5	30	-
9327	250	402	350	22	206	370	23.5	250	230	6.5	24	11.0
9328	250	402	350	22	206	370	23.5	250	230	6.5	24	11.0
9329	250	402	350	22	206	370	23.5	250	230	6.5	24	11.0
9330	340	672	591	28.5	283	624	38	285	265	11.0	28	18.0
9331	450	748.5	680	30.5	389	702	38	285	265	11.0	28	18.0
9332	450	748.5	680	30.5	389	702	38	285	265	11.0	28	18.0

9300 Selection

Installation of 9300 servo inverters with thermal separation (push-through technique)

In some applications thermal separation is required.
Generation of heat within the control cabinet is thus clearly reduced.
This means that the 9300 servo inverters can be designed so that the heatsink remains outside of the control cabinet.
You need a mounting frame and a seal.

- Distribution of the power loss:
  approx. 65% via separate cooler (heatsink and blower)
  approx. 35% inside the controller
- The enclosure type of the separate cooler is IP41.
- The ratings of the controller are still effective.

Alternatively, the controller can be installed with the attached fixing rail.

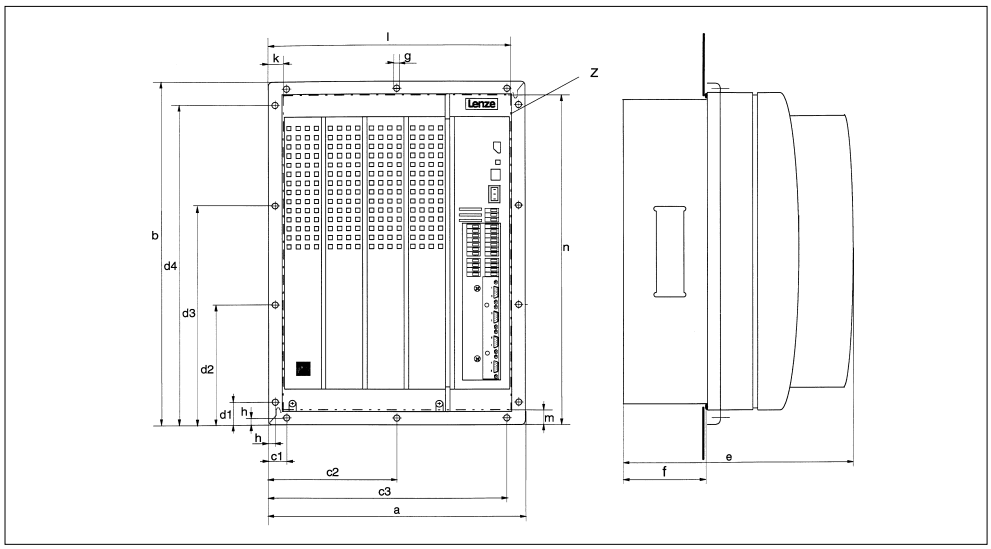

Controller	a [mm]	b [mm]	c1 [mm]	c2 [mm]	c3 [mm]	d1 [mm]	d2 [mm]	d3 [mm]	e [mm]	f [mm]	g [mm]	h [mm]
9321	112.5	385.5	26	86	-	10	115.5	164.5	250	92	6.5	9.0
9322	112.5	385.5	26	86	-	10	115.5	164.5	250	92	6.5	9.0
9323	131.5	385.5	26	105	-	10	115.5	164.5	250	92	6.5	9.0
9324	131.5	385.5	26	105	-	10	115.5	164.5	250	92	6.5	9.0
9325	169.5	385.5	26	137	-	10	115.5	164.5	250	92	6.5	9.0
9326	169.5	385.5	26	137	-	10	115.5	164.5	250	92	6.5	9.0
9327	280	379	28	140	252	41	141	1238	238	90	6.0	9.0
9328	280	379	28	140	252	41	141	1238	238	90	6.0	9.0
9329	280	379	28	140	252	41	141	1238	238	90	6.0	9.0

Cutout

	Height [mm]	Width [mm]	k [mm]	l [mm]	m [mm]	n [mm]
9321, 9322	350 ± 3	82 ± 3	20 ± 2	198 ± 2	20 ± 2	359 ± 2
9323, 9324	350 ± 3	101 ± 3	20 ± 2	117 ± 2	20 ± 2	359 ± 2
9325, 9326	350 ± 3	139 ± 3	20 ± 2	155 ± 2	20 ± 2	359 ± 2
9327-9329	338 ± 3	238 ± 1	20 ± 2	259 ± 2	20 ± 2	359 ± 2

* preliminary dimensions

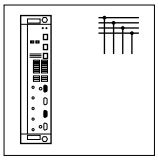

Use fuses or miniature-circuit breakers as cable protection. The following rated currents - adjusted to the corresponding mains current of the controllers - are required by protection facilities:

Controller	Rated current of protection facility	Controller	Rated current of protection facility
9321	6 A	9327	63 A
9322	6 A	9328	63 A
9323	10 A	9329	80 A
9324	10 A	9330	100 A
9325	20 A	9331	125 A
9326	32 A	9332	160 A

Cable protecting fuses

Cable protecting fuses with suitable fuse holders designated for the servos are available.

Controller	Fuse				Fuse holder	
	Rated current	Size	Order number	Required quantity	Order number	Required quantity
9321	M6A	10 x 38	EFSM-0060AWE	3	EFH10001	3
9322	M6A	10 x 38	EFSM-0060AWE	3	EFH10001	3
9323	M10A	10 x 38	EFSM-0100AWE	3	EFH10001	3
9324	M10A	10 x 38	EFSM-0100AWE	3	EFH10001	3
9325	M20A	10 x 38	EFSM-0200AWE	3	EFH10001	3
9326	M32A	14 x 51	EFSM-0320AWH	3	EFH10002	3
9327	M63A	22 x 57	EFSFF0630AYI	3	EFH30006	3
9328	M63A	22 x 57	EFSFF0630AYI	3	EFH30006	3
9329*	T80A	-	-	3	-	-
9330*	T100A	-	-	3	-	-
9331*	T125A	-	-	3	-	-
9332*	T160A	-	-	3	-	-

* Recommendation for standard commercial fuses

Dimensions
Fuse holders

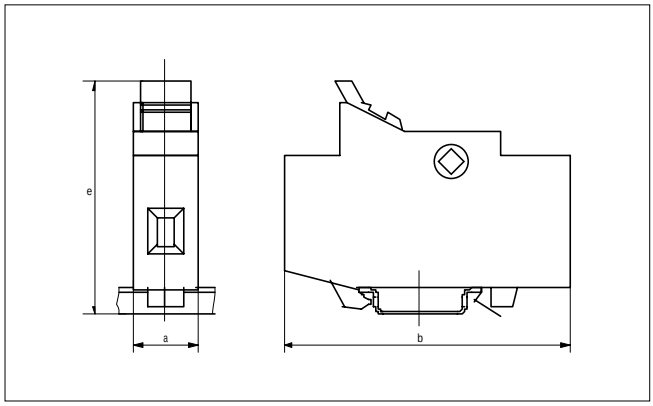

Type	a [mm]	b [mm]	e [mm]	Dimensions of the fuse
EFH10001	17.5	81	68	10 x 38
EFH10002	26	81	68	14 x 51
EFH30006	35	123	83	22 x 57

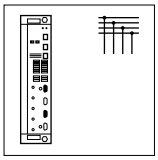

Automatic circuit breakers up to a mains current of 32 A designated for the servos are available.

Controller	Automatic circuit breakers		
	Rated current	Order number	Required quantity
9321	B 6 A	EFA3-B06A	1
9322	B 6 A	EFA3-B06A	1
9323	B 10A	EFA3-B10A	1
9324	B 10A	EFA3-B10A	1
9325	B 20A	EFA3-B20A	1
9326	B 32A	EFA3-B32A	1

Dimensions
Automatic circuit breakers

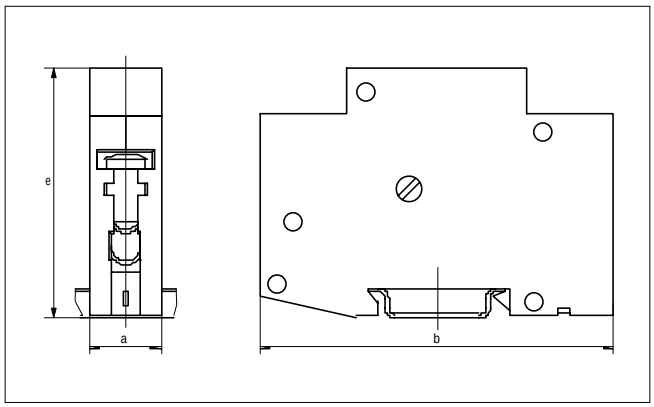

Type	a [mm]	b [mm]	e [mm]
EFA1CXXXA	17.5	80	63
EFA3BXXXA	53	90	63

CE-typical installation

General notes

- The electromagnetic compatibility of a machine depends on the kind of installation, and the care taken.

  Therefore, take special care for:
  - assembly
  - filters
  - screens
  - grounding

For wiring, see the connection diagram of the power stage.

Installation notes

If you observe the following measures you can be sure that the drive system will not cause any EMC problems when running the machine.

- Assembly
  Connect as large a surface as possible of the inverter and mains filter to the grounded mounting plate:
  - Mounting plates with conductive surfaces (zinc-coated) allow a permanent contact.
  - If the mounting plates are painted, the paint must be removed.
  - When using several mounting plates:
  - Connect as large a surface as possible to the mounting plates (e. g. with copper bands)
- Ensure the separation of motor cable from signal and mains cables.
- Do not use the same terminal strip for mains input and motor output.
- Route the cable as close as possible to the reference potential. Loose cables have the same effects as aerials.

Filters

- Only use mains filters or RFI filters and mains chokes suitable for the inverters:
  - RFI filters reduce impermissible high-frequency disturbance to a permissible value.
  - Mains chokes reduce the r.m.s. current consumption of the inverter from the mains, which is especially caused by motor cables and are dependant on their lengths.
  - Mains filters combine the functions of mains choke and RFI filter.

Screens

- Connect the screen of the motor to the screen connection of the drive controller (93xxE).
- If contactors, motor-protections switches, or terminals are located in the motor cable:
  - Also connect the screens of the connected cables to the mounting plate, with a surface as large as possible.
- Connect the screen in the terminal box to PE:
  - Metal cable glands at the motor-terminal box ensure a connection of the screen to the motor housing with a surface as large as possible.
- If the mains cable between mains filter and inverter is longer than 300 mm:
  - Screen mains cable.
  - Connect the screen of the mains cable directly to the inverter and to the mains filter and connect it to the mounting plate with a surface as large as possible.
- When using a brake chopper:
  - Connect the screen of the brake-resistor cable directly to the mounting plate at the brake chopper and the brake resistor with a surface as large as possible.
  - Connect the screen of the cable between inverter and brake chopper directly to the mounting plate at the inverter and the brake chopper with a surface as large as possible.
- When operating the inverters in DC-bus connection:
  - Screen the cables between the inverters (+VG/-VG) and the DC-bus bar star point.
  - Connect both screen ends to the mounting plate with a surface as large as possible.
- Screen the control cables:
  - Connect both screen ends of digital control cables.
  - Connect one screen end of analog control cables.
  - Connect the screens of the control cables to the screen connections provided at the inverter over the shortest possible distance.
- When using 93xxE inverters in residential areas:
  - To limit the emission in residential areas, an additional screening of = 10 dB is required. This is usually achieved by installation in enclosed and grounded control cabinets made of metal.

Grounding

- Ground all components (inverter, mains filter, motor filter, mains chokes) using suitable cables connected to a central grounding point (PE bar).
- Maintain the minimum cross-sections prescribed in the safety regulations:
  - For EMC, not the cable cross section is important but the surface and the contact with a cross-section as large as possible, i.e. large surface.

Mains filter A for 9300 servo inverter

Depending on the area of application, different measures to reduce the mains current and RFI are necessary at the mains side.
Normally, these measures are not compulsory, but they ensure the universal application of a servo inverter.
Mains filters reduce EMC interference and mains currents of the controller. Two limit value classes of EMC interference are distinguished.

Limit value class A is often required for industrial mains, which are separated from mains in residential areas. The noise emission of the connected consumer must not exceed the defined characteristic. Limit value class B is valid for residential areas.
Connect a mains filter A to the servo inverter to comply with limit value class A.

Technical data

Controller	Mains filter A				
	Order number	I_r [A]	V_{mains} [V]	Inductance [mH]	m [kg]
9321	EZN3A2400H002	1.5	400...480	24.0	0.8
9322	EZN3A1500H003	2.5	400...480	15.0	1.15
9323	EZN3A0900H004	4.0	400...480	9.0	1.55
9324	EZN3A0500H007	7.0	400...480	5.0	2.55
9325	EZN3A0300H013	13.0	400...480	3.0	5.2
9326	EZN3A0150H024	24.0	400...480	1.5	8.2
9327	EZN3A0110H030	30.0	400...480	1.1	16.0
9328	EZN3A0080H042	42.0	400...480	0.80	17.0
9329	EZN3A0055H060	60.0	400...480	0.55	30.0
9330	EZN3A0037H090	90.0	400...480	0.37	40.0
9331	EZN3A0022H150	150.0	400...480	0.22	60.0
9332	EZN3A0022H150	150.0	400...480	0.22	60.0

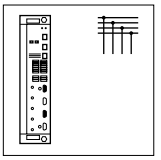

Dimensions of mains filters A

Order number	Figure	a [mm]	b [mm]	c [mm]	d [mm]	e [mm]	m [mm]	n [mm]
EZN3A2400H002	A	77	71	50	38	98	5	9
EZN3A1500H003	A	95	82	56	35	115	5	9
EZN3A0900H004	A	95	90	56	43	116	5	9
EZN3A0500H007	A	119	95	90	49	138	5	9
EZN3A0300H013	A	150	106	113	64	162	6	11
EZN3A0150H024	A	180	120	136	67	192	7	12

Dimensions of mains filters A, for connection to the servo inverter

Order number	Figure	a	b	b_1	c	d	d_1	d_2	d_3	d_4	e	m	n
EZN3A0110H030	B	278	710	365	258	670	22	300	38	300	250	11	6.5
EZN3A0080H042													
EZN3A0055H060											285		
EZN3A0037H090	B	368	1015	516	345	964	38	4421	38	335	285	18	11

		a	a_1	b	b_1	c	d	d_1	d_2	d_3	e	f	g	k	m
EZN3A0022H150	C	500	478	800	680	455	750	38	372	328	470	1000	11	28	18

Figure A

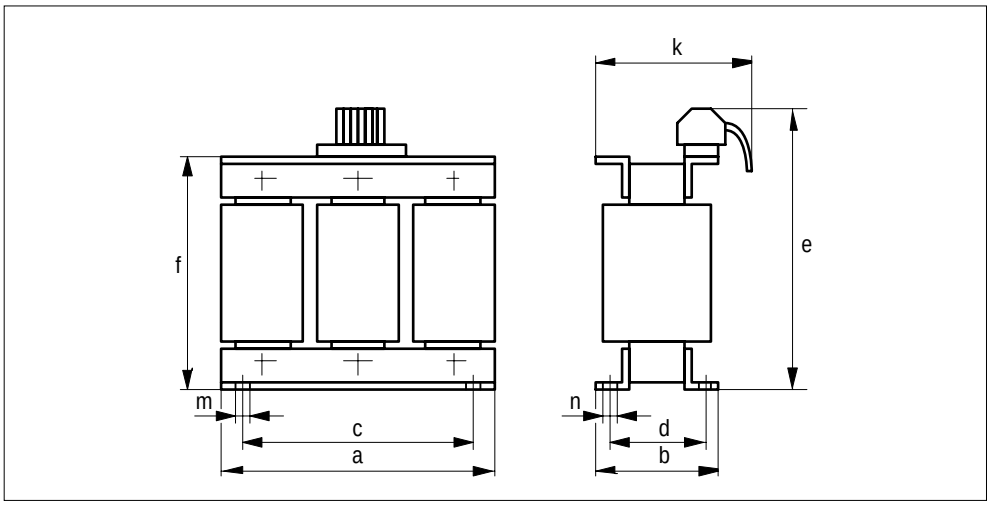

Mains filter A for 9300 servo inverters

Figure B

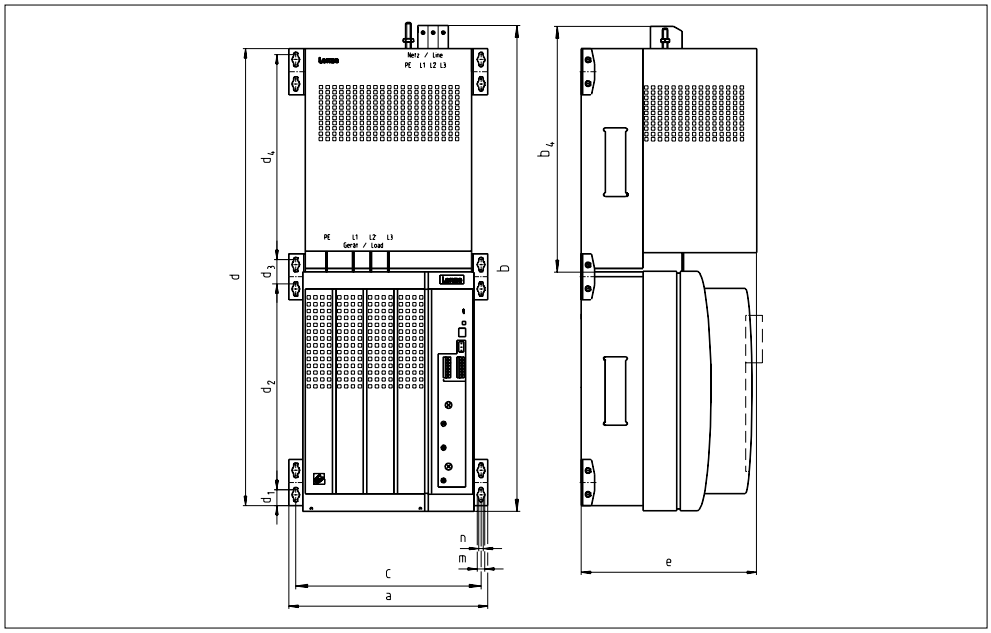

Figure C

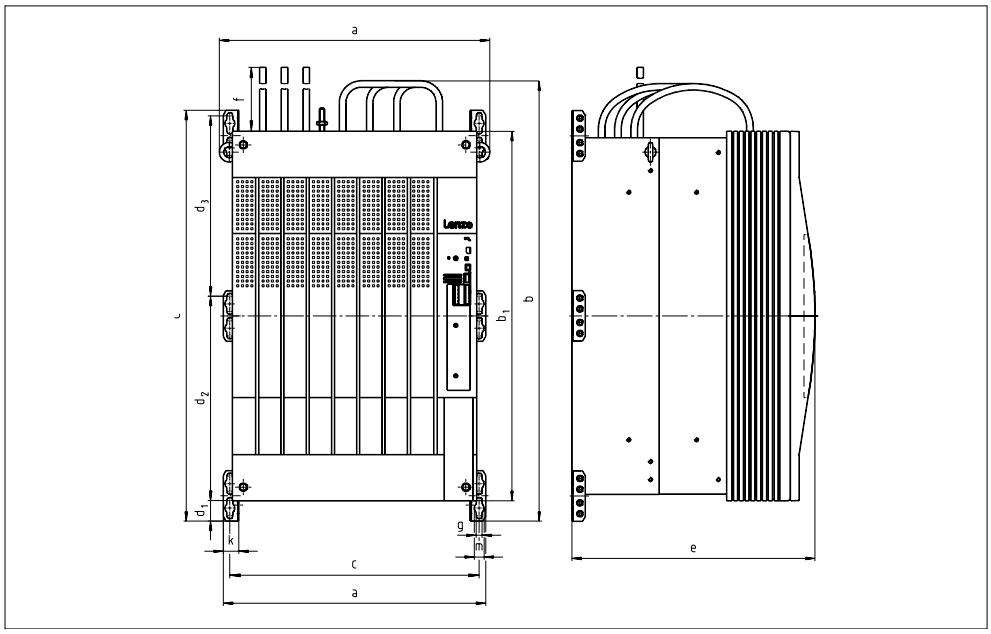

The filter is equipped with a matching connecting cable and, therefore, must be directly mounted onto the servo.

Mains filter B for 9300 servos

Depending on the area of application, different measures to reduce the mains current and RFI are necessary at the mains side.
Normally, these measures are not compulsory, but they ensure the universal application of a servo inverter.
Mains filters reduce EMC interference and mains currents of the controller. Two limit value classes of EMC interference are distinguished.

When the servo inverter is not operated in an industrial mains, but in a residential area, other devices such as radios and TV sets can be interfered. Here, RFI suppression measures according to EN 55011, limit value class B, are necessary.
Limit value class B is clearly lower than limit value class A.
Limit value class A is valid for industrial mains.
Connect a mains filter B to the servo inverter to comply with limit value class B.
Figure 1 shows such a filter.

Technical data

Controller	Mains filter B				
	Order number	I_r [A]	V_{mains} [V]	Inductance [mH]	m [kg]
9321	EZN3B2400H002	1.5	400...480	24.0	0.8
9322	EZN3B1500H003	2.5	400...480	15.0	1.15
9323	EZN3B0900H004	4.0	400...480	9.0	1.55
9324	EZN3B0500H007	7.0	400...480	5.0	2.55
9325	EZN3B0300H013	13.0	400...480	3.0	5.2
9326	EZN3B0150H024	24.0	400...480	1.5	8.2
9327	EZN3B0110H030	30.0	400...480	1.1	16.0
9328	EZN3B0080H042	42.0	400...480	0.80	17.0
9329	EZN3B0055H060	60.0	400...480	0.55	30.0
9330	EZN3B0037H090	90.0	400...480	0.37	40.0
9331	EZN3B0022H150	150.0	400...480	0.22	60.0
9332	EZN3B0022H150	150.0	400...480	0.22	60.0

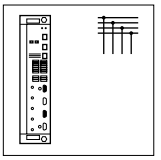

Dimensions of mains filters B

Order number	Figure	a [mm]	b [mm]	c [mm]	d [mm]	e [mm]	m [mm]	n [mm]
EZN3A2400H002	A	77	71	50	38	98	5	9
EZN3A1500H003	A	95	82	56	35	115	5	9
EZN3A0900H004	A	95	90	56	43	116	5	9
EZN3A0500H007	A	119	95	90	49	138	5	9
EZN3A0300H013	A	150	106	113	64	162	6	11
EZN3A0150H024	A	180	120	136	67	192	7	12

Dimensions of mains filters B, for connection to servos

Order number	Figure	a	b	b_1	c	d	d_1	d_2	d_3	d_4	e	m	n
EZN3B0110H030	B	278	710	365	258	670	22	300	38	300	250	11	6.5
EZN3B0080H042													
EZN3B0055H060											285		
EZN3B0037H090	B	368	1015	516	345	964	38	4421	38	335	285	18	11

		a	a_1	b	b_1	c	d	d_1	d_2	d_3	e	f	g	k	m
EZN3B0022H150	C	500	478	800	680	455	750	38	372	328	470	1000	11	28	18

Figure A

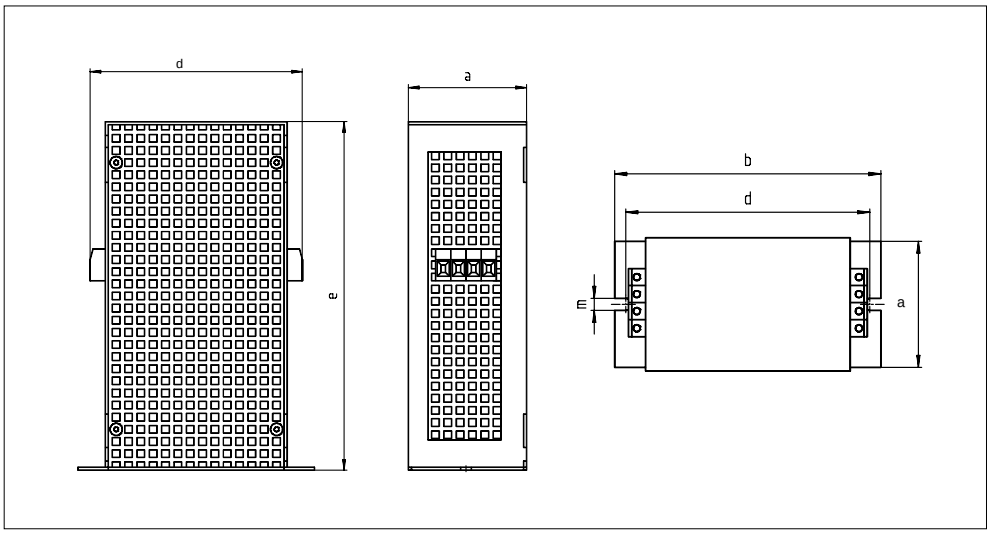

Figure B

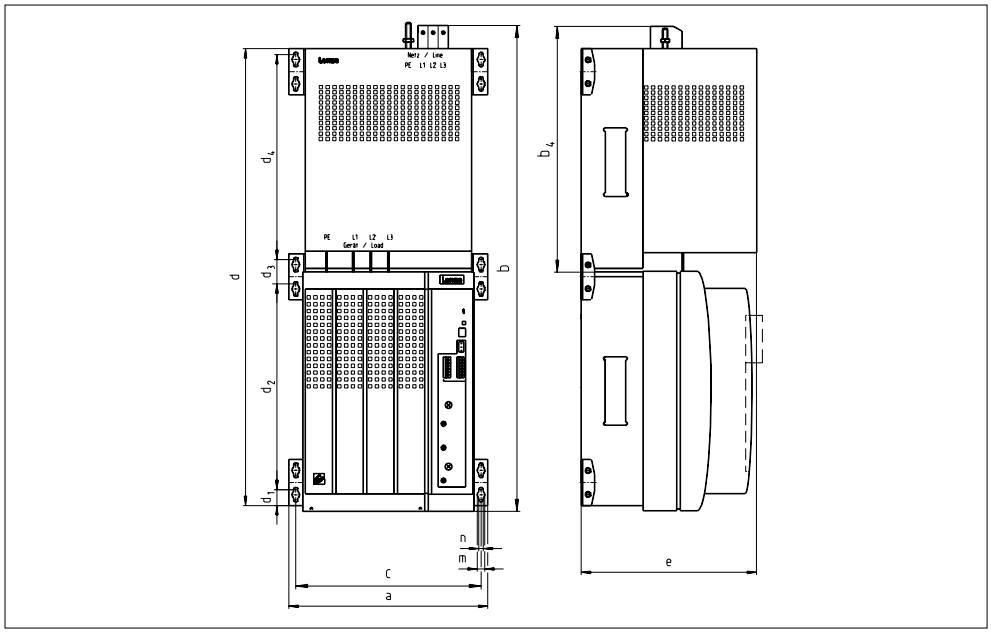

Figure C

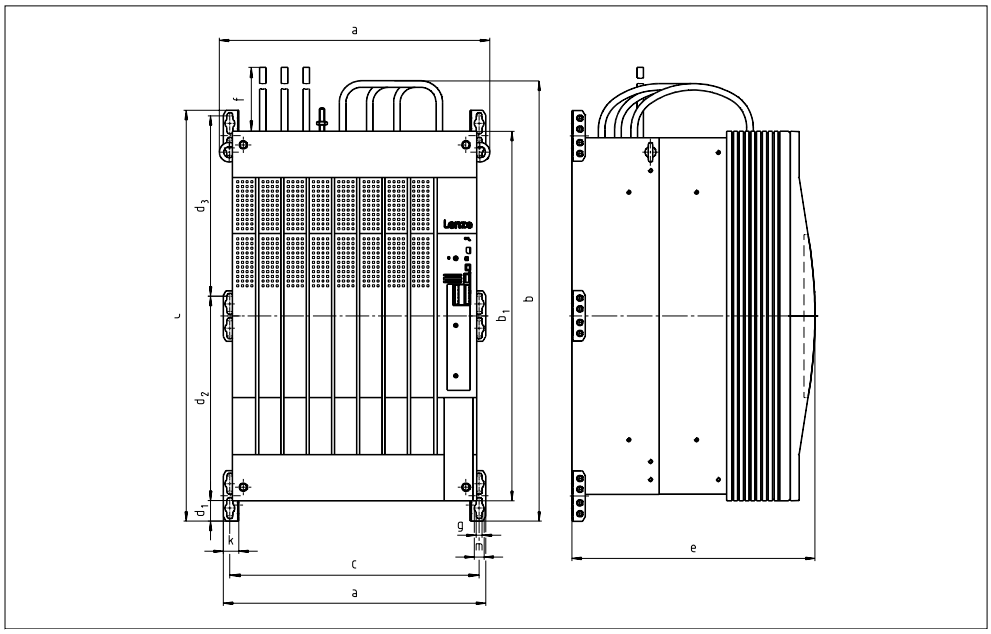

The filter is equipped with matching connecting cable and, therefore, must be directly mounted onto the servo inverter.

Options

Braking operation with brake unit
If a motor is braked by the servo inverter over a short time, the motor operates in the generator mode and feeds back energy to the servo inverter. The DC-bus voltage of the servo inverter rises. If the voltage becomes too high, the servo inverter inhibits the power stages and the motor coasts to standstill. By using a brake unit which consists of a brake module with integrated resistor or a brake chopper with external resistor, the regenerative energy is led to the brake resistor and dissipated as heat.
The drive can be decelerated in a controlled way.

Regenerative operation
Particularly for multi-axis and DC bus connections, a regenerative power supply module can be alternatively used. These components contribute to save energy and costs.

Selection of brake resistors
The brake resistors are selected according to the continuous power loss and the energy to be braked. The rated power of the brake resistors is calculated as follows:

$$P_r = \frac{t_{br}}{t_{cyc}} \times P_{max} \; ; \; P_{max} = \frac{1}{2} \frac{W_{kin}}{t_{br}}$$

The maximum kinetic energy to be dissipated results form the peak brake power and the maximum duty time of the brake chopper.

$$W_{max} = P_{max} \cdot t_{0max}$$

P_{max}: Brake power during braking

t_{br}: Braking time

t_{cyc}: Time between two brake cycles

W_{kin}: Kinetic energy to be braked

t_{0max}: Maximum duty time of the brake chopper

Since the frequency change is also led through the set-point integrator of the inverter during braking, the value "Tif" set at the inverter can be used as brake time t_{br}.

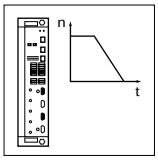

9351 brake module

The 9351 brake module already integrates a brake resistor. This brake resistor has a resistance of 47 Ohm. The maximum peak brake power is 12 kW with a duty time cycle of 1 % per 4 seconds.

Depending on the brake power required, the brake module can be used with all controllers of the 9300 series. If a higher brake power is required, the 9352 brake chopper with a matched external brake resistor can be selected.

Technical data of 9351 brake module

Supply voltage	270 ... 780 V		
Threshold at 400 V	725 V DC	Max. brake energy	50 kWS
Threshold at 460 V	725 V DC	Min. brake resistance	47 Ohm internal
Threshold at 480 V	765 V DC		
Max. current	16 A DC	Ambient temperature	0 ... 40 ºC
Continuous brake power	100 W	Storage temperature	-20 ... 70 ºC
Peak brake power	12 kW at 1 % max. duty time of 4 s	Humidity	Humidity class F

Dimensions

Controller	Order number	a [mm]	b [mm]	b1 [mm]	c [mm]	d [mm]	e [mm]	g [mm]	k [mm]	m [mm]
EMB9351-E	EMB9351-E	52	384	350	26	365	186	6.5	30	2.6

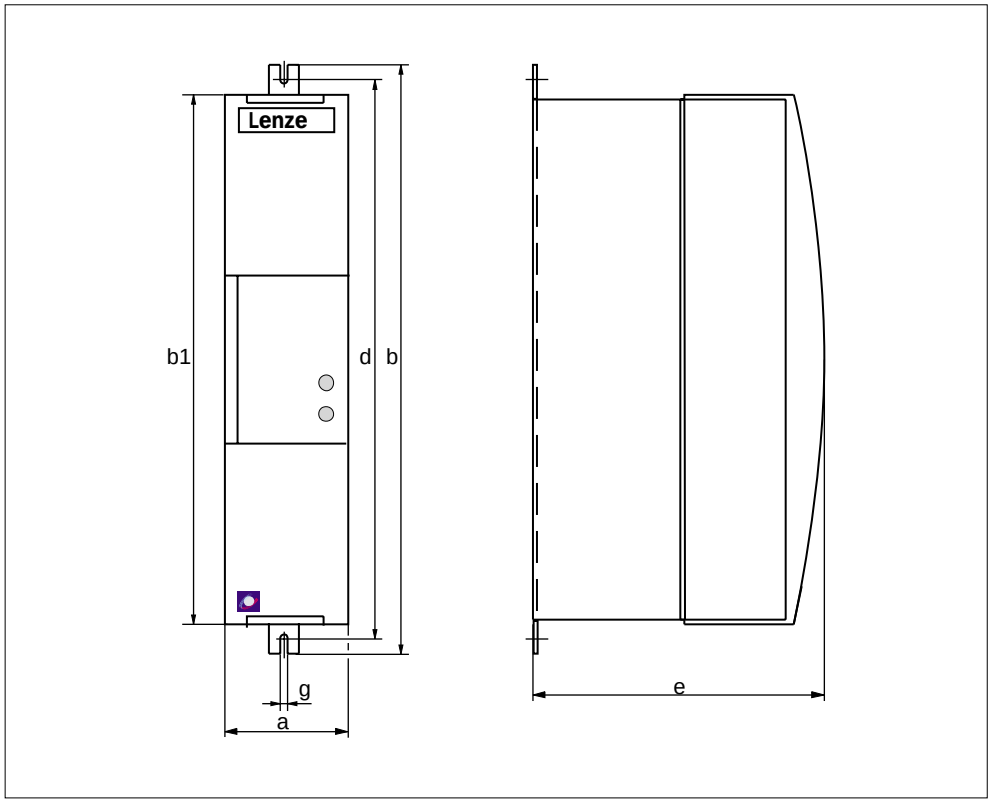

The brake module can also be installed with thermal separation - just like the servo inverters.

9352 brake chopper

The 9352 brake chopper offers an optimum adaptation to the required brake power, because this brake chopper is operated with an external brake resistor. The minimum brake resistance is 18 Ohm.

The brake chopper can be placed directly next to the 9300 servo.
If a smaller brake power is required, the 9351 brake module with an integrated brake resistor can be used.

Technical data of 9352 brake chopper

Supply voltage	270 ... 780 V		
Threshold at 400 V AC	725 V DC	Max. brake energy	Depending on the brake resistor
Threshold at 460 V AC	725 V DC	Min. brake resistance	18 Ohm
Threshold at 480 V AC	765 V DC		
Max. current	42 A DC	Ambient temperature	0 ... 40 °C
Continuous brake power	19 kW	Storage temperature	-20 ... 70 °C
Peak brake power	32 kW 50 % at max. duty time of 60s	Humidity	Humidity class F

Combination of brake resistor and brake chopper for the 9300 servo inverters

Unit	Brake chopper		Brake resistor					
	Order no.	Lowest resistance [Ohm]	Order no.	Resistance [Ohm]	Peak-power [kW]	Continuous power [W]	Thermal capacitance [kWs]	m [kg]
9321	EMB9352-E	18	ERBD180R300W	180	3.0	300	45.0	2.0
9322	EMB9352-E	18	ERBD180R300W	180	3.0	300	45.0	2.0
9323	EMB9352-E	18	ERBD082R600W	82	6.0	600	90.0	3.1
9324	EMB9352-E	18	ERBD068R800W	68	8.0	800	120.0	4.3
9325	EMB9352-E	18	ERBD047R01k2	47	12.0	1200	180.0	4.9
9326	EMB9352-E	18	ERBD047R01k2	47	12.0	1200	180.0	4.9
9327	EMB9352-E	18	ERBD033R01k2	33	17.0	2000	300	7.1
9328	EMB9352-E	18	ERBD022R03k0	22	26.0	3000	450	10.6
9329	EMB9352-E	18	ERBD018R03k0	18	32.5	3000	450	10.6
9330 2 x	EMB9352-E	18	ERBD022R03k0	22	26.0	3000	450	10.6
9331 2 x	EMB9352-E	18	ERBD022R03k0	22	26.0	3000	450	10.6
9332 3 x	EMB9352-E	18	ERBD022R03k0	22	26.0	3000	450	10.6

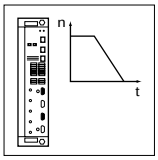

Dimensions of brake chopper

Controller	Order number	a [mm]	b [mm]	b1 [mm]	c [mm]	d [mm]	e [mm]	g [mm]	k [mm]	m [mm[
9352	EMB9352-E	52	384	350	26	365	186	6.5	30	2.2

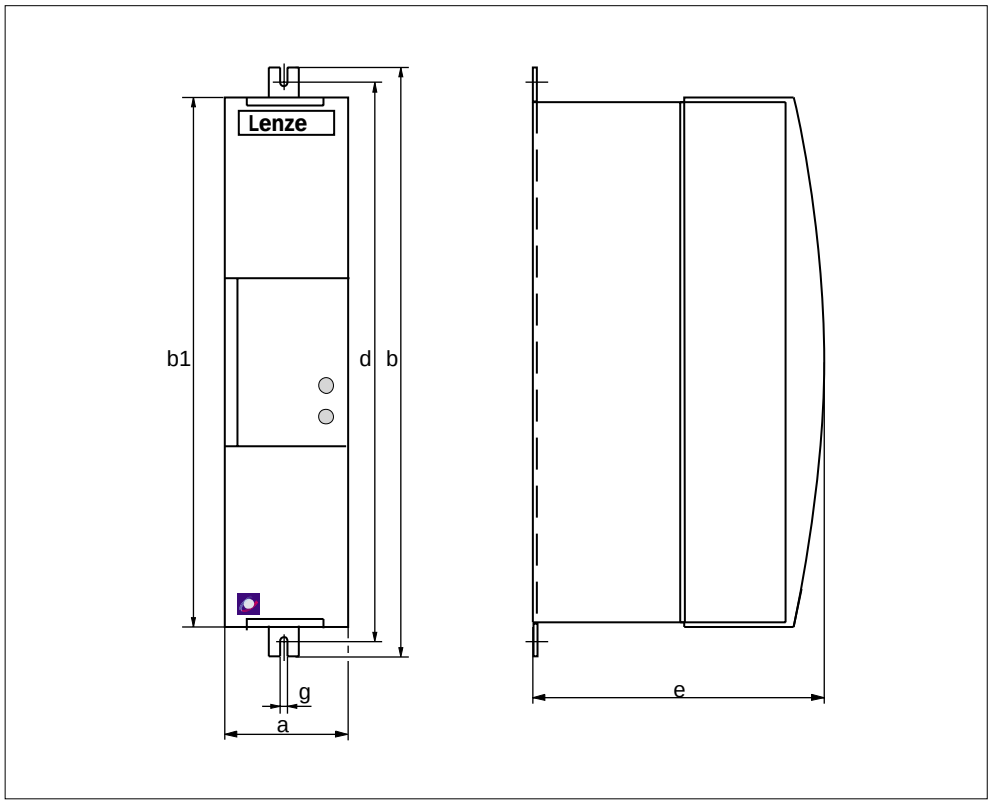

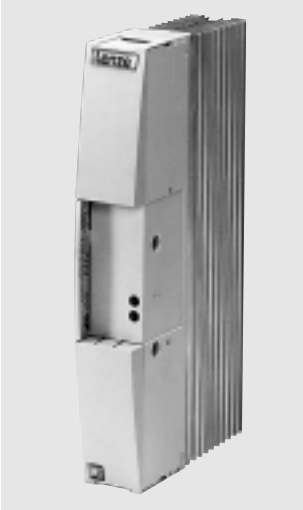

The brake chopper can also be installed with thermal separation - just like the servos.

9352 brake resistors for 9300 servos

Dimensions of brake resistors with grid

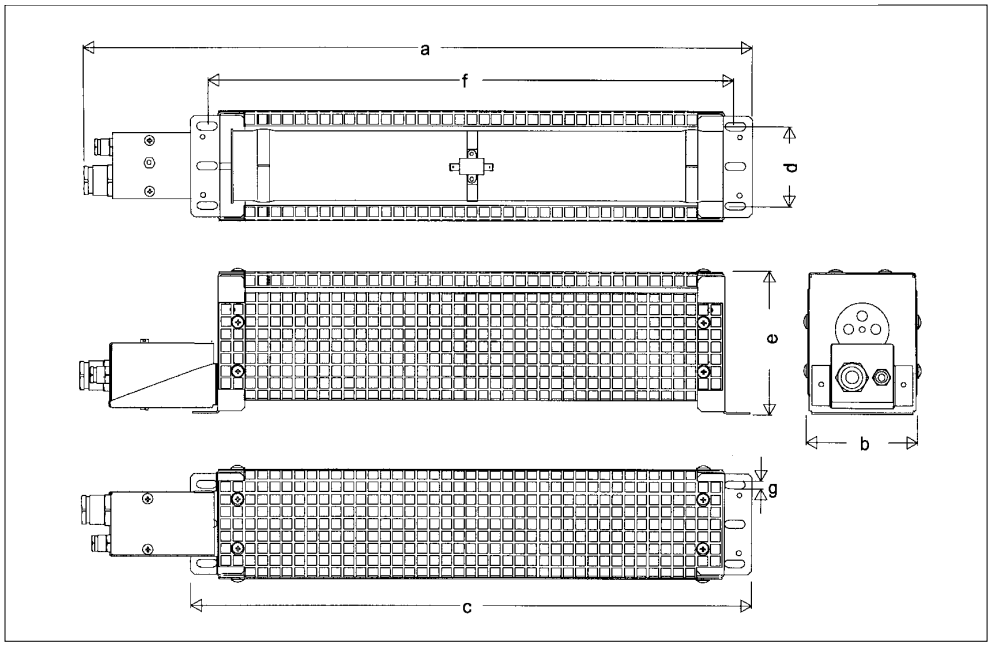

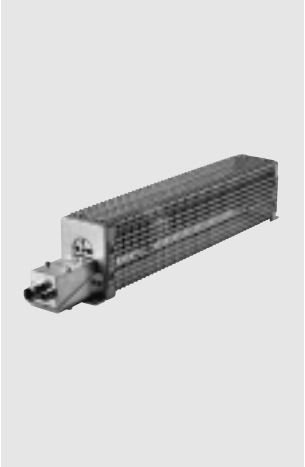

Brake resistor Order No.	a [mm]	b [mm]	c [mm]	d [mm]	e [mm]	f [mm]	g [mm]	h [mm]
ERBD180R300W	440	89	354	64	115	326	6.5	13
ERBD082R600W	640	89	554	64	115	526	6.5	13
ERBD068R800W	540	177	454	150	115	526	6.5	13
ERBD047R01k2	640	177	554	150	115	526	6.5	13
ERBD033R02k0	640	265	654	240	115	526	6.5	13
ERBD022R03k0	740	177	654	150	229	626	6.5	13
ERBD018R03k0	740	177	654	150	229	626	6.5	13

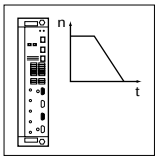

9352 brake chopper for 9300 servos

Brake units

- Please observe:
  - The assignments in the table allow a maximum brake time of 15 seconds
  - Relative duty time of 10 %.
- The assignment refers to the set controller continuous power.
- You can achieve a higher brake power by other resistors or by connecting several resistors in parallel or in series. Do not fall below the smallest value indicated!
- All brake resistors indicated have an integrated temperature monitoring.
- Parallel connection of brake choppers for higher brake power.

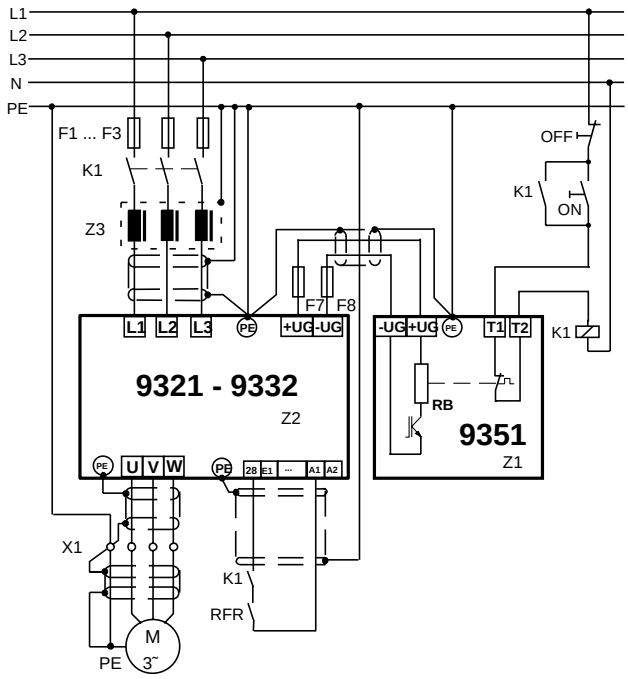

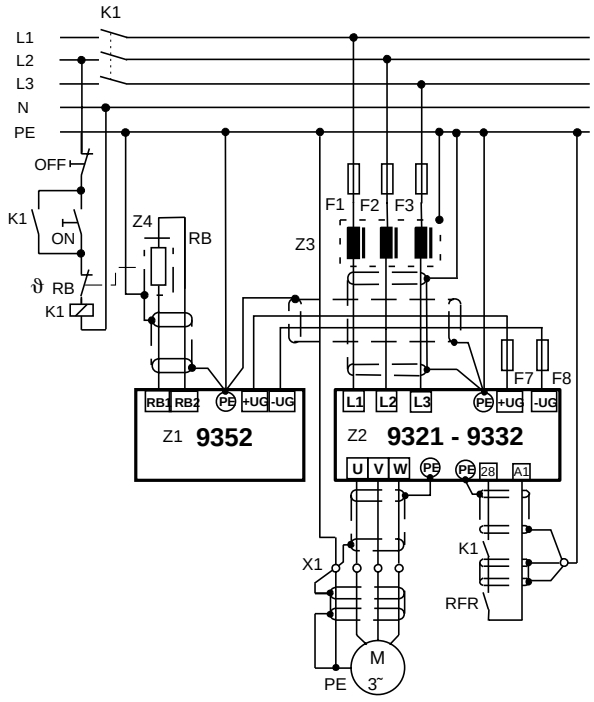

Regenerative power supply modules for 9300 servos

The 9340 regenerative power supply modules offer advantages, especially for multi-axis connections and DC bus connections. These controllers are space-saving and have an IP20 enclosure. Thanks to the universal system of the 9300 series these additional components can be connected directly next to the 9300 servo inverters. The supply and regenerative modules feed the brake regenerative power supply energy back into the mains.

The dissipation of the brake energy does not present a problem. For mains connections you can use mains filters and for DC bus connection DC bus fuses.
The 9351 brake module or the 9352 brake chopper are an alternative to regenerative power supply module. The brake energy in these modules is dissipated as heat.

General data of the supply and regenerative modules

Humidity	Humidity class F without condensation (relative humidity 85% without condensation)
Transport temperature	-25 ... 70 ºC
Storage temperature	25 ... 55 ºC
Operating temperature	0 ... 40 ºC / 40 ... 50 ºC with power derating 2.0 % per K
Noise immunity	IEC801-2 to 5 severity 4
Degree of pollution	VDE 110 part 2 degree of pollution 2
Dielectric strength	VDE 0110 surge strength class III
Packaging	according to DIN 4180
Enclosure	IP 20 IP 42 on the heatsink side with thermal separation in push-through technique NEMA 1
Approval	CE conformity and UL approval
Air pressure	100 % rated current at 900 mbar (approx. 1000m a.m.s.l.) according to VDE 875 part 11 and pr EN 55082

Ratings

Type	**9341**	**9342**	**9343**
Mains voltage	320 ... 528 V ± 0 %		
Mains frequency	48 ... 62 Hz ± 0 %		
Output power [kVA]	7.8	15.6	29.6
Rated mains current [A]	12.0	24.0	45.0
Max. mains current [A]	18.0	36.0	72.0
Power loss [W]	100	200	400
Power derating	2 % / ºC, 5 % / 1000 m		

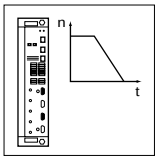

Regenerative power supply modules for 9300 servos

Dimensions

Controller	a [mm]	b [mm]	b1 [mm]	c [mm]	c1 [mm]	d [mm]	d1 [mm]	e [mm]	e1 [mm]	g [mm]	k [mm]	m [kg]
9341	135	384	350	21,5	92	365	-	230	250	6.5	30	7.5
9342	135	384	350	21.5	92	365	-	230	250	6.5	30	7.5
9343	250	404	350	14	205	396	24	230	250	6.5	25	12.5

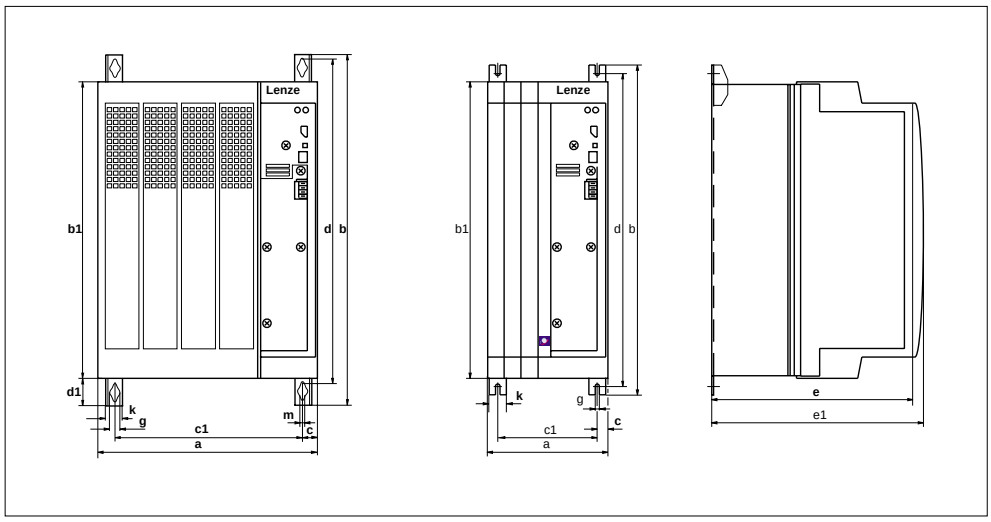

The regenerative power supply module can also be installed with thermal separation - just like the servo.

Mains filter for 9340 regenerative power supply modules

Depending on the field of application , different measures to reduce the mains current and RFI are necessary at the mains side.
Normally, these measures are not compulsory, but they ensure the universal application of a servo inverter. Mains filters reduce EMC interference and mains currents of the controller.

Two limit value classes of EMC interference are distinguished. Limit value class A is often required for industrial mains, which are separated from mains in residential areas. The noise emission of the connected consumer must not exceed the defined characteristic. Connect a mains filter A to the servo inverter to comply with limit value class A.

Technical data

Controller	Mains filter A				
	Order number	I_r [A]	V_{mains} [V]	Inductance [mH]	m [kg]
9341	EZN3A0120H012	12.0	480	1.20	4.7
9342	EZN3A0088H024	24.0	480	0.88	12.2
9343	EZN3A0055H045	45.0	480	0.55	15.0

Dimensions of mains filter A

Order number	Figure	a [mm]	b [mm]	c [mm]	d [mm]	e [mm]	m [mm]	n [mm]
EZN3A0120H012	A	135	260	135	245	230	7.0	-
EZN3A0088H024	A	135	380	135	365	230	7.0	-

EZN3A0055H045	B	a	b	b_1	c	d	d_1	d_2	d_3	d_4	e	m	n
		278	710	365	258	670	22	300	38	300	250	11	6.5

Figure A

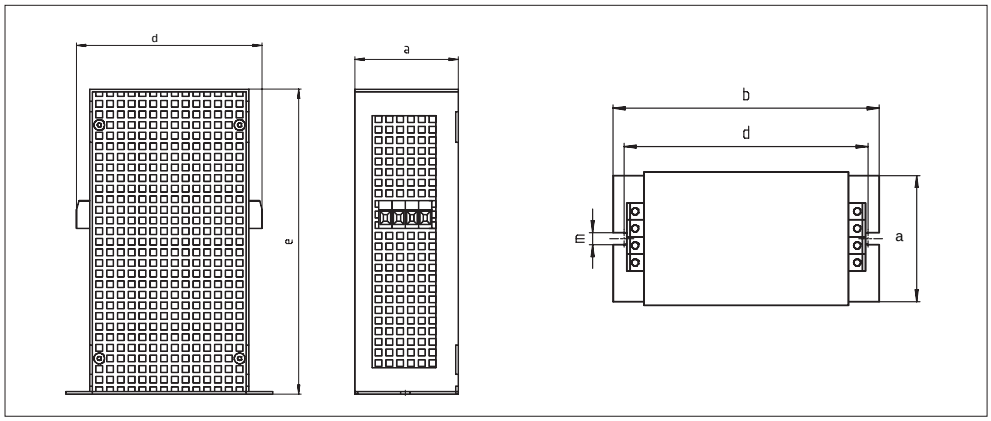

Figure B

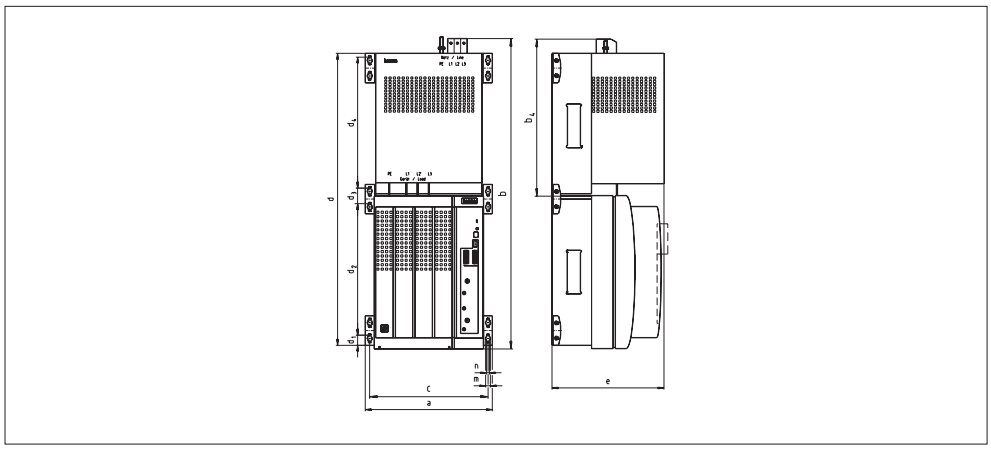

DC-bus fuses

Controller	Fuse				Fuse holder	
	Rated current [A]	Size	Order number	Required quantity	Order number	Required quantity
9341	16	27 x 60	EFSCC0160AYJ	2	EFH20004	1
9342	32	27 x 60	EFSCC0320AYJ	2	EFH20004	1
9343	70	27 x 60	EFSCC0800AYJ	2	EFH20004	1

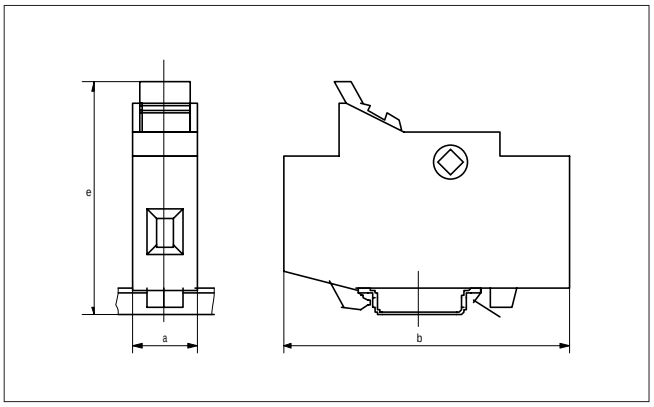

Dimensions of fuse holders

Type	a [mm]	b [mm]	e [mm]
EFH20004	77.0	150.0	107.0

DC-bus fuses for DC-bus connection

DC-bus fuses with suitable holders are assigned to the individual frequency inverters for DC-bus connection.

Controller	Fuse				Fuse holder	
	Rated current [A]	Size	Order number	Required quantity	Order-number	Required quantity
9321	CC 6.0	27 x 60	EFSCC0060AYJ	2	EFH20004	1
9322	CC 6.0	27 x 60	EFSCC0060AYJ	2	EFH20004	1
9323	CC 8.0	27 x 60	EFSCC0080AYJ	2	EFH20004	1
9324	CC 12.0	27 x 60	EFSCC0120AYJ	2	EFH20004	1
9325	CC 16.0	27 x 60	EFSCC0160AYJ	2	EFH20004	1
9326	CC 40.0	27 x 60	EFSCC0400AYJ	2	EFH20004	1
9327	CC 50.0	27 x 60	EFSCC0500AYJ	2	EFH20004	1
9328	CC 80.0	27 x 60	EFSCC0800AYJ	2	EFH20004	1
9329	CC 100.0	27 x 60	EFSCC1000AYJ	2	EFH20004	1
9330	CC 80.0	27 x 60	EFSCC0800AYJ	4 *	EFH20004	2 *
9331	CC 100.0	27 x 60	EFSCC1000AYJ	4 *	EFH20004	2 *
9332	CC 80.0	27 x 60	EFSCC0800AYJ	6 *	EFH20004	3 *

* parallel

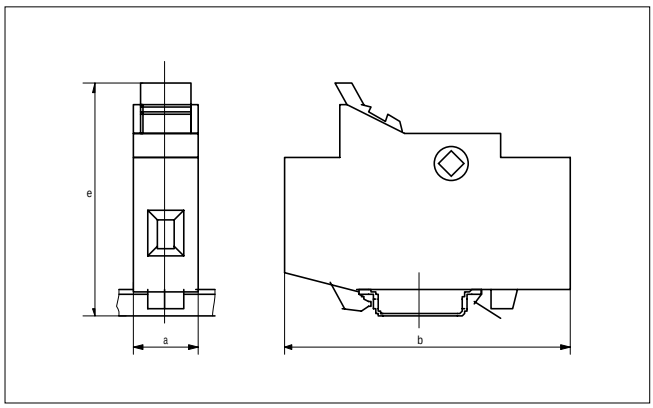

Dimensions of fuse holders

Type	a [mm]	b [mm]	e [mm]
EFH20004	77.0	150.0	107.0

The key to the 9300 servo

- Parameter setting:
  The factory settings of the 9300 servo (menus) correspond to the most common applications. To adapt your drive to your requirements you can modify easily and conveniently all parameters of the servo using the operation module to be attached at the front side.
- Transfer of parameter sets:
  The integrated, non-volatile memory enables - even when no voltage is applied the temporary storing of a parameter set in the operation module.
  When using several drives, the parameter set can thus be transferred from controller to controller.
- Drive control:
  The drive can be controlled via the keypad of the operation module.
- Display of fault and status messages:
  Your drive can be monitored easily and fast by the LCD display.

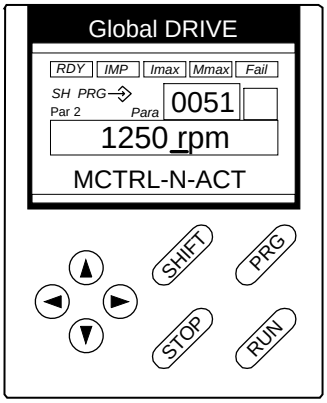

9372BB hand terminal

The EMZ 9372BB hand terminal can be used for display and error diagnosis. This hand terminal can be connected to the system bus of the servo inverter.
All parameters can be accessed.
In networked systems up to 63 servo inverters can be addressed by one hand terminal.

2173IB PC/System bus converter

Using the PC/System bus converter, the parameters of the 9300 servo can be set. By means of this tool, you can access the controller data via a PC, even when a fieldbus module is attached.

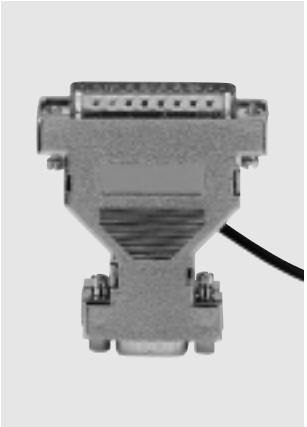

9374IB terminal expansion

The terminal expansion serves as extension of the digital input and output terminals. All eight terminals can be freely programmed as inputs or outputs. By convenient connection via the system bus, a terminal expansion can be used for several controllers. The terminals have a response time of 1-2 ms.

BCD decade switch

By means of the BCD decade switch, different set-points (gear ratios or set positions) can be directly entered as digital values. In a system with several controllers in digital frequency cascade configuration, the gear ratios can thus be modified individually.

Operation terminal

The operation terminal can be used to preset or display up to 128 data of a controller or controller group. This is especially helpful in distributed configurations, in order to allow diagnostics directly at the machine. The terminal is programmed via a comfortable user interface using Windows technique.

Digital display

A voltmeter can be connected to the monitor outputs for the display of the output frequency or motor speed.

Name	Type	Ranges	Cut-out	Depth
Voltmeter 3 1/2 digits	EPD203	0 - 6 V 0 - 20 V 0 - 200 V	91 mm x 22.5 mm	81.5 mm

Setpoint potentiometer

The speed (setpoint input or field-frequency input) can be entered via an external potentiometer.

For this, the setpoint potentiometer is connected to terminals 7, 8, and 9. A scale and a knob are additionally available.

Name	Order No.	Data	Dimensions
Setpoint potentiometer	ERPD0010k0001W	10 kΩ / 1 Watt	6 mm x 35 mm
Knob	ERZ0001		36 mm diameter
Scale	ERZ0002	0...100 %	62 mm diameter

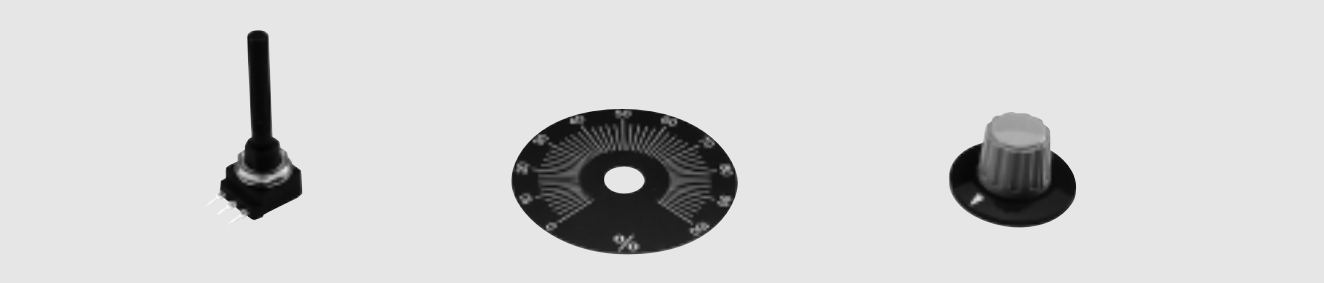

Communication with a host

Networking via the RS 232/485 interface

The controllers of the 9300 series can be easily networked with an RS 232 or RS 485 interface of a host (PLC or PC) using attachable modules. The modules are plugged on instead of the operation module. Three versions are available:

- 2102IBV001: RS 232/485 interface
- 2102IBV002: RS 485 interface
  The RS 232 and RS 485 interfaces are 9-pole SubD connectors. The RS 485 interface offers a screw terminal for the connection with the next drive.
  We recommend to use the 2101IB level converter in addition for electrical isolation of the host.
- 2102IBV003: Fibre optics
  The absolutely noise-immune and very economical networking via fibre is realized with a simple plastic fibre. The fibre optic is adapted to the module via a fibre-optic female connector. For the host, we offer simple plug-on components of the 2151IB series which can be plugged to the interface of the communication modules of your PLC.

The LECOM protocol is required for the communication via all three interfaces. We have completely published the LECOM protocol for your own applications. However, it is also completely integrated into different systems (e. g. Simatic S5) so that the integration into a control is very easy for you. For parameter setting, you can use Global Drive Control 1 Software.

Networking via the system bus (CAN)

The system bus of the 9300 servo is a slave connection with a communication profile according to CIA DS 301. All parameters of the controller can be read and written. Together with a miniature control, the process data can be transmitted directly.

Networking via hosts with high process speed

- 2111IB InterBus-S module
  Using the 2111IB module, the InterBus-S is connected directly to the remote bus. This connection supports the DRIVECOM profile 21. This very convenient way of networking controllers is achieved using a 9-pole Sub-D connector. A 15 V connection for an external supply of the remote bus is also available on the module.
- 2131IB Profibus module
  The PROFIBUS fieldbus module is a slave connection module with the PROFIBUS-DP communication profile. This module can be plugged on like the other fieldbus modules. It presents an interesting solution for the integration into a process with medium dynamic response.

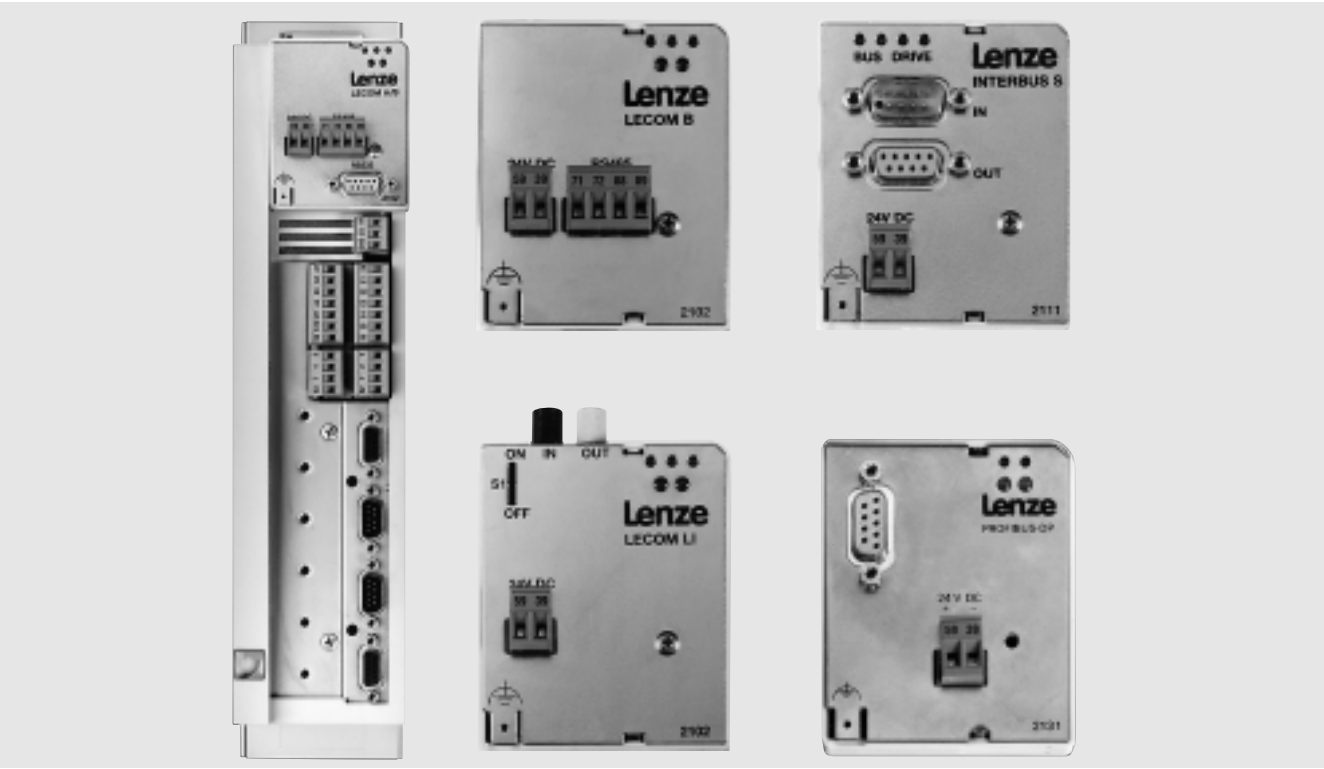

Accessories for all devices

Name	Order number
9371 operation module	EMZ9371BB
Digital display	EPD203
Hand terminal	EMZ9372BB
Setpoint potentiometer	ERPD0010k0001W
Knob for potentiometer	ERZ0001
Scale for potentiometer	ERZ0002
RS232/485 fieldbus module	EMF2102IB-V001
RS485 fieldbus module	EMF2102IB-V002
Level converter for RS485	EMF2101IB
PC system cable for RS232/485	EWL0020
PC program for Global Drive controller	ESP-GDC
Fibre-optic fieldbus module	EMF2102IB-V003
Fibre-optic adapter for PLC 0...40 m	EMF2125IB
Power supply unit for fibre-optic adapter 2125	EJ0013
InterBus-S module	EMF2111IB
PROFIBUS module	EMF2131IB
Terminal expansion	EMZ9374IB
PC/System converter	EMF2173IB
BCD decade switch	
Operation terminal	

9321-9324 type specific accessories

Name	Order number			
Controller	**9321**	**9322**	**9323**	**9324**
Automatic-circuit breaker	EFA3B06A	EFA3B06A	EFA3B10A	EFA3B10A
Fuse	EFSM-0060AWE	EFSM-0060AWE	EFSM-0100AWE	EFSM-0100AWE
Fuse holder	EFH1001	EFH1001	EFH1001	EFH1001
Mains filter type A	EZN3A2400H002	EZN3A1500H003	EZN3A0900H004	EZN3A0500H007
Mains filter type B	EZN3B2400H002	EZN3B1500H003	EZN3B0900H004	EZN3B0500H007
Brake module	EMB9351-E	EMB9351-E	EMB9351-E	EMB9351-E
Brake chopper	EMB9352-E	EMB9352-E	EMB9352-E	EMB9352-E
Brake resistor	ERBD180R300W	ERBD180R300W	ERBD082R600W	ERBD068R800W
Thermal separation (push-through)	EJ0036	EJ0036	EJ0037	EJ0037
DC bus fuse	EFSCC0060AYJ	EFSCC0060AYJ	EFSCC0080AYJ	EFSCC0120AYJ
Fuse holder	EFH20004	EFH20004	EFH20004	EFH20004

9325-9328 type specific accessories

Name	Order number			
Controller	**9325**	**9326**	**9327**	**9328**
Automatic-circuit breaker	EFA3B20A	EFA3B32A	-	-
Fuse	EFSM-0200AWE	EFSM-0320AWH	EFSFF-0630AYJ	EFSFF-0630AYJ
Fuse holder	EFH1001	EFH1001	EFH1001	EFH1001
Mains filter type A	EZN3A0300H013	EZN3A0150H024	EZN3A0110H030	EZN3A0080H042
Mains filter type B	EZN3B0300H013	EZN3B0150H024	EZN3B0110H030	EZN3B0080H042
Brake module	EMB9351-E	EMB9351-E	EMB9351-E	EMB9351-E
Brake chopper	EMB9352-E	EMB9352-E	EMB9352-E	EMB9352-E
Brake resistor	ERBD047R01k2	ERBD047R01k2	ERBD022R03k0	ERBD022R03k0
Thermal separation (push-through)	EJ0038	EJ0038	EJ0011	EJ0011
DC bus fuse	EFSCC0200AYJ	EFSCC0400AYJ	EFSCC0500AYJ	EFSCC0800AYJ
Fuse holder	EFH20004	EFH20004	EFH20004	EFH20004

9329-9332 type specific accessories

Name	Order number			
Controller	**9329**	**9330**	**9331**	**9332**
Mains filter type A	EZN3A0055H060	EZN3A0037H090	EZN3A0022H150	EZN3A0022H150
Mains filter type B	EZN3B0055H060	EZN3B0037H090	EZN3B0022H150	EZN3B0022H150
Brake module	EMB9351-E	EMB9351-E	EMB9351-E	EMB9351-E
Brake chopper	EMB9352-E	EMB9352-E	EMB9352-E	EMB9352-E
Brake resistor	ERBD018R03k0	ERBD022R03k0 (2x)	ERBD018R03k0 (2x)	ERBD022R03k0 (3x)
Thermal separation (push-through)	EJ0011			
DC bus fuse	EFSCC1000AYJ	EFSCC0800AYJ (2x)	EFSCC1000AYJ (2x)	EFSCC0800AYJ (3x)
Fuse holder	EFH20004	EFH20004 (2x)	EFH20004 (2x)	EFH20004 (3x)

9341-9343 type specific accessories

Name	Order number		
Controller	**9341**	**9342**	**9343**
Mains filter type A	EZN3A0120H012	EZN3A0088H024	EZN3A0055H045
Mains filter type B	-	-	-
Brake module	-	-	-
Brake chopper	-	-	-
Brake resistor	-	-	-
Thermal separation (push-through)	EJ0038	EJ0038	EJ0011
DC bus fuse	EFSCC0160AYJ	EFSCC0320AYJ	EFSCC0800AYJ
Fuse holder	EFH20004	EFH20004	EFH20004

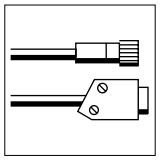

Preassembled system cables facilitate the connection of Lenze servo motors to the 9300 servo. The following cables are available (see figure):

- Motor cables
- Blower cables
- Cables for the regenerative power supply module
- Additional cables

Motor cable and brake cable

Standard cable
1.5 mm EWLMxxxGM-015C
2.5 mm EWLMxxxGM-025
4.0 mm EWLMxxxGM-040
10 mm EWLMxxxGM-100

Cable suitable for trailing
2.5 mm≤ EWLMxxxGMS025
4.0 mm≤ EWLMxxxGMS040

Intermediate cable
1.5 mm≤ EWLMxxxGZ-015C EWLMxxxZM-015C

Blower cable

Standard cable
EWLLxxxGM

Cable suitable for trailing
EWLLxxxGMS

Intermediate cable
EWLLxxxGM or EWLLxxxZM
EWLLxxxGMS

Resolver and encoder cable

Standard cable
9300 X7
Resolver: EWLRxxxGM-T or
Encoder: EWLExxxGM-T

Intermediate cable
EWLRxxxGM-T EWLRxxxZM-T

Cable suitable for trailing
EWLRxxxGM-T EWLRxxxZMST

Motor cables

Preassembled motor cables facilitate the connection of servo motors to the 9300 servo. The cables have a connector at the motor side, the other side is open for control-cabinet cabling.
Other advantages:

- Integrated brake connection
- Screened cable
- Wiring according to EMC
- Economical connection

Type	Length	Connector for motor frame size	Current-carrying capacity *	Core cross-section	Cable diameter	Bending radius		Weight
	(m)		(A)	mm^2	mm	Fixed installation	Flex.installation **	kg
1.5 mm^2 standard cable								
EWLM002GM-015C	2.5	056 - 090	15.0	1.5	13.5	7.5 x d	15 x d	0.6
EWLM005GM-015C	5.0	056 - 090	15.0	1.5	13.5	7.5 x d	15 x d	1.0
EWLM010GM-015C	10.0	056 - 090	15.0	1.5	13.5	7.5 x d	15 x d	2.0
EWLM015GM-015C	15.0	056 - 090	15.0	1.5	13.5	7.5 x d	15 x d	2.4
EWLM020GM-015C	20.0	056 - 090	15.0	1.5	13.5	7.5 x d	15 x d	3.7
EWLM025GM-015C	25.0	056 - 090	15.0	1.5	13.5	7.5 x d	15 x d	4.6
EWLM030GM-015C	30.0	056 - 090	15.0	1.5	13.5	7.5 x d	15 x d	5.5
EWLM035GM-015C	35.0	056 - 090	15.0	1.5	13.5	7.5 x d	15 x d	6.4
EWLM040GM-015C	40.0	056 - 090	15.0	1.5	13.5	7.5 x d	15 x d	7.3
EWLM045GM-015C	45.0	056 - 090	15.0	1.5	13.5	7.5 x d	15 x d	8.2
EWLM050GM-015C	50.0	056 - 090	15.0	1.5	13.5	7.5 x d	15 x d	9.1
EWLM075GM-015C	75.0	056 - 090	15.0	1.5	13.5	7.5 x d	15 x d	13.6
EWLM100GM-015C	100.0	056 - 090	15.0	1.5	13.5	7.5 x d	15 x d	18.1
2.5 mm^2 standard cable								
EWLM002GM-025	2.5	056 - 090	20.0	2.5	11.3	7.5 x d	15 x d	0.7
EWLM005GM-025	5.0	056 - 090	20.1	2.5	11.3	7.5 x d	15 x d	1.3
EWLM010GM-025	10.0	056 - 090	20.0	2.5	11.3	7.5 x d	15 x d	2.5
EWLM015GM-025	15.0	056 - 090	20.0	2.5	11.3	7.5 x d	15 x d	3.7
EWLM020GM-025	20.1	056 - 090	20.1	2.5	11.3	7.5 x d	15 x d	4.9
EWLM025GM-025	25.0	056 - 090	20.1	2.5	11.3	7.5 x d	15 x d	6.1
EWLM030GM-025	30.0	056 - 090	20.1	2.5	11.3	7.5 x d	15 x d	7.3
EWLM035GM-025	35.0	056 - 090	20.1	2.5	11.3	7.5 x d	15 x d	8.5
EWLM040GM-025	40.0	056 - 090	20.1	2.5	11.3	7.5 x d	15 x d	9.7
EWLM045GM-025	45.0	056 - 090	20.1	2.5	11.3	7.5 x d	15 x d	10.9
EWLM050GM-025	50.0	056 - 090	20.1	2.5	11.3	7.5 x d	15 x d	12.1
EWLM075GM-025	75.0	056 - 090	20.1	2.5	11.3	7.5 x d	15 x d	18.1
EWLM100GM-025	100.0	056 - 090	20.1	2.5	11.3	7.5 x d	15 x d	24.1
4.0 mm^2 standard cable								
EWLM005GM-040	5.0	100 - 112	28.1	4.0	13.5	7.5 x d	15 x d	1.9
EWLM010GM-040	10.0	100 - 112	28.1	4.0	13.5	7.5 x d	15 x d	3.6
EWLM015GM-040	15.0	100 - 112	28.1	4.0	13.5	7.5 x d	15 x d	5.4
EWLM020GM-040	20.1	100 - 112	28.1	4.0	13.5	7.5 x d	15 x d	7.1
EWLM025GM-040	25.0	100 - 112	28.1	4.0	13.5	7.5 x d	15 x d	8.9
EWLM030GM-040	30.0	100 - 112	28.1	4.0	13.5	7.5 x d	15 x d	11.5
EWLM035GM-040	35.0	100 - 112	28.1	4.0	13.5	7.5 x d	15 x d	12.4
EWLM040GM-040	40.0	100 - 112	28.1	4.0	13.5	7.5 x d	15 x d	14.1
EWLM045GM-040	45.0	100 - 112	28.1	4.0	13.5	7.5 x d	15 x d	15.9
EWLM050GM-040	50.0	100 - 112	28.1	4.0	13.5	7.5 x d	15 x d	17.6
EWLM075GM-040	75.0	100 - 112	28.1	4.0	13.5	7.5 x d	15 x d	26.4
EWLM100GM-040	100.0	100 - 112	28.1	4.0	13.5	7.5 x d	15 x d	35.1
10.0 mm^2 standard cable								
EWLM005GM-100	5.0	100 - 112	50.0	10.0	19.5	7.5 x d	15 x d	4.0
EWLM010GM-100	10.0	100 - 112	50.0	10.0	19.5	7.5 x d	15 x d	7.8
EWLM015GM-100	15.0	100 - 112	50.0	10.0	19.5	7.5 x d	15 x d	11.7
EWLM020GM-100	20.1	100 - 112	50.0	10.0	19.5	7.5 x d	15 x d	15.4
EWLM025GM-100	25.0	100 - 112	50.0	10.0	19.5	7.5 x d	15 x d	19.4
EWLM030GM-100	30.0	100 - 112	50.0	10.0	19.5	7.5 x d	15 x d	23.2
EWLM035GM-100	35.0	100 - 112	50.0	10.0	19.5	7.5 x d	15 x d	27.1
EWLM040GM-100	40.0	100 - 112	50.0	10.0	19.5	7.5 x d	15 x d	30.9
EWLM045GM-100	45.0	100 - 112	50.0	10.0	19.5	7.5 x d	15 x d	34.8
EWLM050GM-100	50.0	100 - 112	50.0	10.0	19.5	7.5 x d	15 x d	38.6
EWLM075GM-100	75.0	100 - 112	50.0	10.0	19.5	7.5 x d	15 x d	57.9
EWLM100GM-100	100.0	100 - 112	50.0	10.0	19.5	7.5 x d	15 x d	77.1

* according to VDE 298, mounting position B2 at 25 ºC ambient temperature ** repeated bending not permitted
Caution: The cable cross-section must be selected according to the rated motor current.

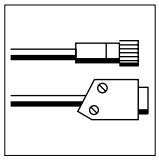

Cables suitable for trailing

When running positioning and traversing drives with servos, special connecting cables are required in many cases. Lenze offers the user cables which are suitable for trailing. In addition to the advantages of the standard cables, they are designed for continuous movement.

Type	Length	Connector for motor frame size	Current-carrying capacity *	Core cross-section	Cable diameter-	Bending radius		Weight
	(m)		(A)	mm²	mm	Fixed installation	In trailing operation	kg
2.5 mm² cable suitable for trailing								
EWLM002GMS025	5.0	056 - 090	20.0	2.5	12.8	5 x d	10 x d	1.4
EWLM005GMS025	10.0	056 - 090	20.0	2.5	12.8	5 x d	10 x d	2.7
EWLM010GMS025	15.0	056 - 090	20.0	2.5	12.8	5 x d	10 x d	4.0
EWLM015GMS025	20.0	056 - 090	20.0	2.5	12.8	5 x d	10 x d	5.3
EWLM020GMS025	25.0	056 - 090	20.0	2.5	12.8	5 x d	10 x d	6.6
EWLM025GMS025	30.0	056 - 090	20.0	2.5	12.8	5 x d	10 x d	7.9
EWLM030GMS025	35.0	056 - 090	20.0	2.5	12.8	5 x d	10 x d	9.2
EWLM040GMS025	40.0	056 - 090	20.0	2.5	12.8	5 x d	10 x d	10.5
EWLM050GMS025	50.0	056 - 090	20.0	2.5	12.8	5 x d	10 x d	20.5
EWLM075GMS025	75.0	056 - 090	20.0	2.5	12.8	5 x d	10 x d	26.1
EWLM100GMS025	100.0	056 - 090	20.0	2.5	12.8	5 x d	10 x d	32.1
4.0 mm² cable suitable for trailing								
EWLM002GMS040	5.0	100 - 112	28.0	4.0	14.0	5 x d	10 x d	1.1
EWLM005GMS040	10.0	100 - 112	28.0	4.0	14.0	5 x d	10 x d	1.9
EWLM010GMS040	15.0	100 - 112	28.0	4.0	14.0	5 x d	10 x d	3.6
EWLM015GMS040	20.0	100 - 112	28.0	4.0	14.0	5 x d	10 x d	5.4
EWLM020GMS040	25.0	100 - 112	28.0	4.0	14.0	5 x d	10 x d	7.1
EWLM025GMS040	30.0	100 - 112	28.0	4.0	14.0	5 x d	10 x d	8.9
EWLM030GMS040	35.0	100 - 112	28.0	4.0	14.0	5 x d	10 x d	11.5
EWLM040GMS040	40.0	100 - 112	28.0	4.0	14.0	5 x d	10 x d	14.1
EWLM050GMS040	50.0	100 - 112	28.0	4.0	14.0	5 x d	10 x d	17.6
EWLM075GMS040	75.0	100 - 112	28.0	4.0	14.0	5 x d	10 x d	26.4
EWLM100GMS040	100.0	100 - 112	28.0	24.0	14.0	5 x d	10 x d	35.1

If the drive is initialized in the factory, the whole system must be wired up.
After commissioning, all connections must be removed again.

Intermediate cables are very advantageous for this. Motor plugs are connected to one end of the cable, couplings to the other end. The plug-in connectors extend the motor cable and facilitate dismantling considerably.

Type	Length	Connector for motor frame size	Current-carrying capacity *	Core cross-section	Cable diameter	Bending radius		Weight
	(m)		(A)	mm²	mm	Fixed installation	Flex.installation **	kg
1.5 mm² intermediate inverter cable								
EWLM002GZ-015C	2.5	056 - 090	15.0	1.5	13.5	7.5 x d	15 x d	0.7
EWLM005GZ-015C	5.0	056 - 090	15.0	1.5	13.5	7.5 x d	15 x d	1.1
EWLM007GZ-015C	7.5	056 - 090	15.0	1.5	13.5	7.5 x d	15 x d	1.6
EWLM010GZ-015C	0.0	056 - 090	15.0	1.5	13.5	7.5 x d	15 x d	2.0
EWLM015GZ-015C	15.0	056 - 090	15.0	1.5	13.5	7.5 x d	15 x d	2.9
EWLM020GZ-015C	20.0	056 - 090	15.0	1.5	13.5	7.5 x d	15 x d	3.8
EWLM030GZ-015C	30.0	056 - 090	15.0	1.5	13.5	7.5 x d	15 x d	5.6
EWLM050GZ-015C	50.0	056 - 090	15.0	1.5	13.5	7.5 x d	15 x d	9.2
1.5 mm² intermediate motor cable								
EWLM002ZM-015C	2.5	056 - 090	15.0	1.5	13.5	7.5 x d	15 x d	0.7
EWLM005ZM-015C	5.0	056 - 090	15.0	1.5	13.5	7.5 x d	15 x d	1.1
EWLM007ZM-015C	7.5	056 - 090	15.0	1.5	13.5	7.5 x d	15 x d	1.6
EWLM010ZM-015C	0.0	056 - 090	15.0	1.5	13.5	7.5 x d	15 x d	2.0
EWLM015ZM-015C	15.0	056 - 090	15.0	1.5	13.5	7.5 x d	15 x d	2.9
EWLM020ZM-015C	20.0	056 - 090	15.0	1.5	13.5	7.5 x d	15 x d	3.8
EWLM030ZM-015C	30.0	056 - 090	15.0	1.5	13.5	7.5 x d	15 x d	5.6
EWLM050ZM-015C	50.0	056 - 090	15.0	1.5	13.5	7.5 x d	15 x d	9.2

* according to VDE 298, mounting position B2 at 25 ºC ambient temperature ** repeated bending not permitted
Caution: The cable cross-section must be selected according to the rated motor current.

Blower cables

Global Drive servo motors can be equipped with a separate blower on the B-side.
The connection is possible via a cable.

A plug on the motor side enables an easy connection of the blower cable. You can choose between standard cables and cables suitable for trailing.

Type	Length	Cross-section/	Cable diameter	Bending radius		Weight
	(m)	number of cores (mm^2)	mm	Fixed installation	Flex.installation**	kg
Standard cable						
EWLL002GM	2.5	0.5	7.2	10 x d	15 x d	0.3
EWLL005GM	5.0	0.5	7.2	10 x d	15 x d	0.4
EWLL010GM	10.0	0.5	7.2	10 x d	15 x d	0.7
EWLL015GM	15.0	0.5	7.2	10 x d	15 x d	1.0
EWLL020GM	20.0	0.5	7.2	10 x d	15 x d	1.3
EWLL025GM	25.0	0.5	7.2	10 x d	15 x d	1.6
EWLL030GM	30.0	0.5	7.2	10 x d	15 x d	1.9
EWLL035GM	35.0	0.5	7.2	10 x d	15 x d	2.2
EWLL040GM	40.0	0.5	7.2	10 x d	15 x d	2.5
EWLL045GM	45.0	0.5	7.2	10 x d	15 x d	2.8
EWLL050GM	50.0	0.5	7.2	10 x d	15 x d	3.1
EWLL075GM	75.0	0.5	7.2	10 x d	15 x d	4.6
EWLL100GM	100.0	0.5	7.2	10 x d	15 x d	6.1
Cable suitable for trailing						
EWLL002GMS	2.5	0.5	7.0	6 x d	10 x d	0.3
EWLL005GMS	5.0	0.5	7.0	6 x d	10 x d	0.4
EWLL010GMS	10.0	0.5	7.0	6 x d	10 x d	0.7
EWLL015GMS	15.0	0.5	7.0	6 x d	10 x d	1.0
EWLL020GMS	20.0	0.5	7.0	6 x d	10 x d	1.3
EWLL025GMS	25.0	0.5	7.0	6 x d	10 x d	1.6
EWLL035GMS	30.0	0.5	7.0	6 x d	10 x d	1.9
EWLL040GMS	40.0	0.5	7.0	6 x d	10 x d	2.5
EWLL050GMS	50.0	0.5	7.0	6 x d	10 x d	3.1
EWLL075GMS	75.0	0.5	7.0	6 x d	10 x d	4.6
EWLL100GMS	100.0	0.5	7.0	6 x d	10 x d	6.1

The blower cable can be connected in the same way as the motor cable.

This intermediate cable also has male/female connectors at both ends.

Type	Length	Cross-section/	Cable diameter	Bending radius		Weight
	(m)	number of cores (mm^2)	mm	Fixed installation	Flex.installation**	kg
Intermediate motor cable						
EWLL002ZM	2.5	0.5	7.2	10 x d	15 x d	0.4
EWLL005ZM	5.0	0.5	7.2	10 x d	15 x d	0.6
EWLL007ZM	7.5	0.5	7.2	10 x d	15 x d	0.9
EWLL010ZM	10.0	0.5	7.2	10 x d	15 x d	1.1
EWLL015ZM	15.0	0.5	7.2	10 x d	15 x d	1.6
EWLL020ZM	20.0	0.5	7.2	10 x d	15 x d	2.1
EWLL030ZM	30.0	0.5	7.2	10 x d	15 x d	3.1
EWLL050ZM	50.0	0.5	7.2	10 x d	15 x d	5.1

** repeated bending not permitted

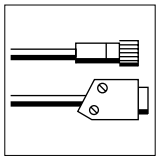

Resolver cables / Encoder cables

You can also use resolvers for the feedback. We provide cables with plugs on both ends to connect the controller with the motor. They are available up to a length of 100 m.

The resolver cable can easily be extended. You can choose between standard intermediate cables and intermediate cables suitable for trailing.

Type	Length	Cross-section/	Cable diameter	Bending radius		Weight
	(m)	number of cores (mm^2)	mm	Fixed installation	Flex.installation **	kg
Standard cable						
EWLR002GM-T	2.5	1x(2x0.5)+3x(2x0.14)	9.3	7.5 x d	15 x d	0.4
EWLR005GM-T	5.0	1x(2x0.5)+3x(2x0.14)	9.3	7.5 x d	15 x d	0.6
EWLR010GM-T	10.0	1x(2x0.5)+3x(2x0.14)	9.3	7.5 x d	15 x d	1.1
EWLR015GM-T	15.0	1x(2x0.5)+3x(2x0.14)	9.3	7.5 x d	15 x d	1.6
EWLR020GM-T	20.0	1x(2x0.5)+3x(2x0.14)	9.3	7.5 x d	15 x d	2.1
EWLR025GM-T	25.0	1x(2x0.5)+3x(2x0.14)	9.3	7.5 x d	15 x d	2.6
EWLR030GM-T	30.0	1x(2x0.5)+3x(2x0.14)	9.3	7.5 x d	15 x d	3.1
EWLR035GM-T	35.0	1x(2x0.5)+3x(2x0.14)	9.3	7.5 x d	15 x d	3.6
EWLR040GM-T	40.0	1x(2x0.5)+3x(2x0.14)	9.3	7.5 x d	15 x d	4.1
EWLR045GM-T	45.0	1x(2x0.5)+3x(2x0.14)	9.3	7.5 x d	15 x d	4.6
EWLR050GM-T	50.0	1x(2x0.5)+3x(2x0.14)	9.3	7.5 x d	15 x d	5.1
EWLR075GM-T	75.0	1x(2x0.5)+3x(2x0.14)	9.3	7.5 x d	15 x d	7.6
EWLR100GM-T	100.0	1x(2x0.5)+3x(2x0.14)	9.3	7.5 x d	15 x d	10.1
Intermediate cable suitable for trailing						
EWLR005ZMST	5.0	1x(2x0.5) + 3x(2x0.14)	11.6	5 x d	10 x d	1.0
EWLR010ZMST	10.0	1x(2x0.5) + 3x(2x0.14)	11.6	5 x d	10 x d	1.7
EWLR015ZMST	15.0	1x(2x0.5) + 3x(2x0.14)	11.6	5 x d	10 x d	2.5
EWLR020ZMST	20.0	1x(2x0.5) + 3x(2x0.14)	11.6	5 x d	10 x d	3.2
EWLR025ZMST	25.0	1x(2x0.5) + 3x(2x0.14)	11.6	5 x d	10 x d	4.0
EWLR030ZMST	30.0	1x(2x0.5) + 3x(2x0.14)	11.6	5 x d	10 x d	4.7
EWLR040ZMST	40.0	1x(2x0.5) + 3x(2x0.14)	11.6	5 x d	10 x d	6.2
EWLR050ZMST	50.0	1x(2x0.5) + 3x(2x0.14)	11.6	5 x d	10 x d	7.7
EWLR075ZMST	75.0	1x(2x0.5) + 3x(2x0.14)	11.6	5 x d	10 x d	11.5
EWLR100ZMST	100.0	1x(2x0.5) + 3x(2x0.14)	11.6	5 x d	10 x d	15.2
Intermediate resolver cable						
EWLR002ZM-T	2.5	1x(2x0.5) + 3x(2x0.14)	9.3	7.5 x d	15 x d	0.4
EWLR005ZM-T	5.0	1x(2x0.5) + 3x(2x0.14)	9.3	7.5 x d	15 x d	0.6
EWLR007ZM-T	7.5	1x(2x0.5) + 3x(2x0.14)	9.3	7.5 x d	15 x d	0.9
EWLR010ZM-T	10.0	1x(2x0.5) + 3x(2x0.14)	9.3	7.5 x d	15 x d	1.1
EWLR015ZM-T	15.0	1x(2x0.5) + 3x(2x0.14)	9.3	7.5 x d	15 x d	1.6
EWLR020ZM-T	20.0	1x(2x0.5) + 3x(2x0.14)	9.3	7.5 x d	15 x d	2.1
EWLR030ZM-T	30.0	1x(2x0.5) + 3x(2x0.14)	9.3	7.5 x d	15 x d	3.1
EWLR050ZM-T	50.0	1x(2x0.5) + 3x(2x0.14)	9.3	7.5 x d	15 x d	5.1
Standard encoder cable						
EWLE002GM-T	2.5	1x(2x1.0) + 4x(2x0.14)	10.7	7.5 x d	15 x d	0.4
EWLE005GM-T	5.0	1x(2x1.0) + 4x(2x0.14)	10.7	7.5 x d	15 x d	0.7
EWLE010GM-T	10.0	1x(2x1.0) + 4x(2x0.14)	10.7	7.5 x d	15 x d	1.4
EWLE015GM-T	15.0	1x(2x1.0) + 4x(2x0.14)	10.7	7.5 x d	15 x d	2.1
EWLE020GM-T	20.0	1x(2x1.0) + 4x(2x0.14)	10.7	7.5 x d	15 x d	2.8
EWLE025GM-T	25.0	1x(2x1.0) + 4x(2x0.14)	10.7	7.5 x d	15 x d	3.4
EWLE030GM-T	30.0	1x(2x1.0) + 4x(2x0.14)	10.7	7.5 x d	15 x d	4.1
EWLE035GM-T	35.0	1x(2x1.0) + 4x(2x0.14)	10.7	7.5 x d	15 x d	4.8
EWLE040GM-T	40.0	1x(2x1.0) + 4x(2x0.14)	10.7	7.5 x d	15 x d	5.5
EWLE045GM-T	45.0	1x(2x1.0) + 4x(2x0.14)	10.7	7.5 x d	15 x d	6.2
EWLE050GM-T	50.0	1x(2x1.0) + 4x(2x0.14)	10.7	7.5 x d	15 x d	6.9
EWLE075GM-T	75.0	1x(2x1.0) + 4x(2x0.14)	10.7	7.5 x d	15 x d	10.3
EWLE100GM-T	100.0	1x(2x1.0) + 4x(2x0.14)	10.7	7.5 x d	15 x d	13.8

** repeated bending not permitted

Other system cables

The 9300 servo inverter can be operated with a digital frequency via the digital frequency input (X 9). It is possible to establish a digital frequency interconnection to other controllers of the system via the additional digital frequency output (X 10). A corresponding Digset cable connects the two controllers to each other.

Type	Length (m)	Cross-section number of cores (mm^2)	Cable diameter mm	Bending radius Fixed installation	Bending radius Flex.Installation	Weight kg
EWLD002GGBS93	2.5	1x(2x0.5) + 3x(2x0.14)	9.3	7.5 x d	15 x d	0.4

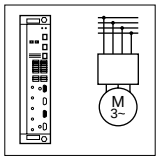

Information about the power connection
Select the cable cross-section of the mains cables according to the maximum input current.
Connect the mains cables to the screw terminals L1, L2, L3 at the top of the controller. Tightening torque: 0.5 - 0.6 Nm.
Apply the screen correctly:
- Screw the screen plate on the fixing bracket.
- Fix screen using links.
  Do not use as strain relief!
- The PE connection is made via the stud next to the power connections.

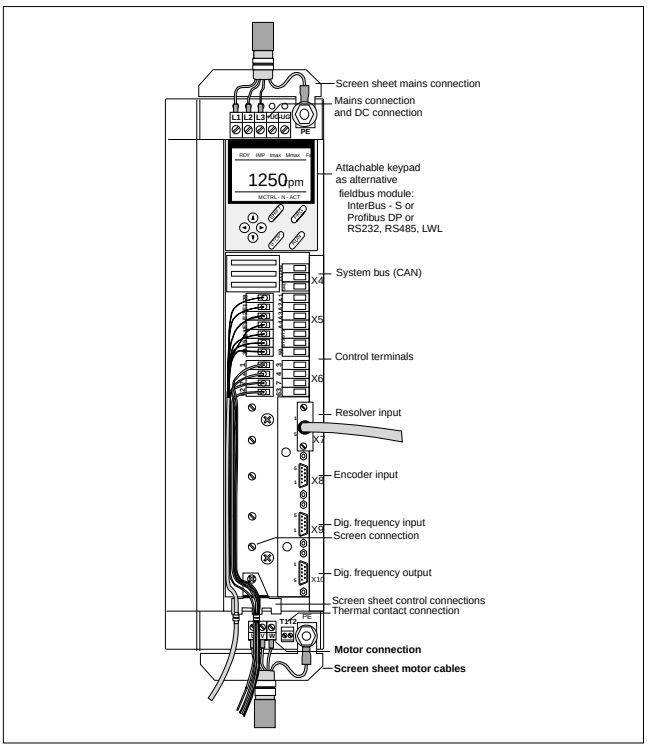

Information about the motor connection
Select the cable cross-section of the motor cables according to the maximum output current.
Connect the motor cables to the screw terminals U, V, W.
Tightening torque: 0.5 - 0.6 Nm.

Apply the screen correctly:
- see power connection.

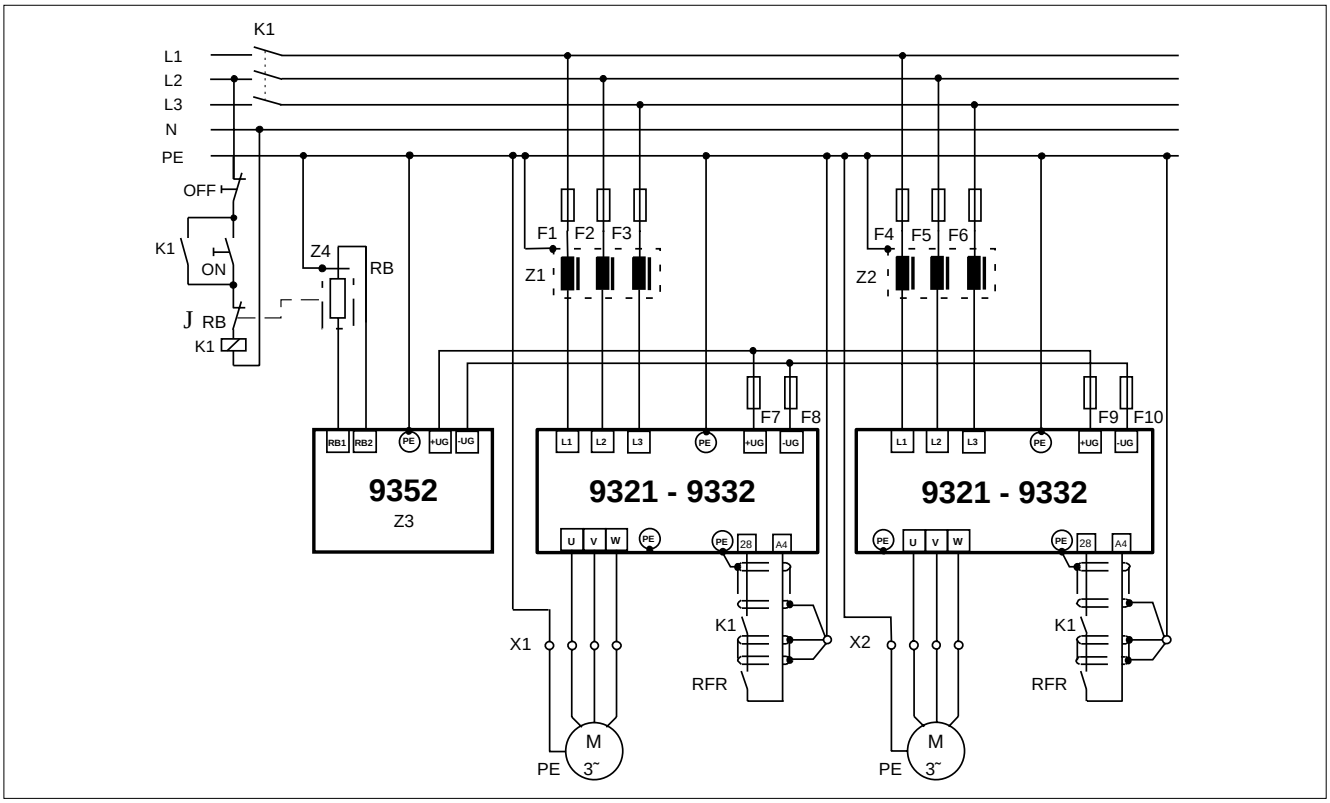

Information about the control cables
The servo inverters have some digital and analog inputs and outputs. These can be supplied with an internal or external control voltage.
The control connections have a basic insulation.
If protection against contact is required,
- a double insulation is necessary.
- the components to be connected must have a second isolating distance.

The following connecting diagrams can be distinguished:

With internal control voltage	With external control voltage
Digital inputs and outputs	Digital inputs and outputs
Analog inputs and outputs	Analog inputs and outputs

Information about the wiring
Connect the control cables to the screw terminals X5 and X6 at the front of the controller.
Tightening torque: 0.5 - 0.6 Nm.
Screening of the control cables.
- The PE connection is made via the screen plate as shown (included in the accessory kit).
  Do not use as a strain relief!
- Connect the screen plate at the controller in the connecting area to the PE area using a screw.

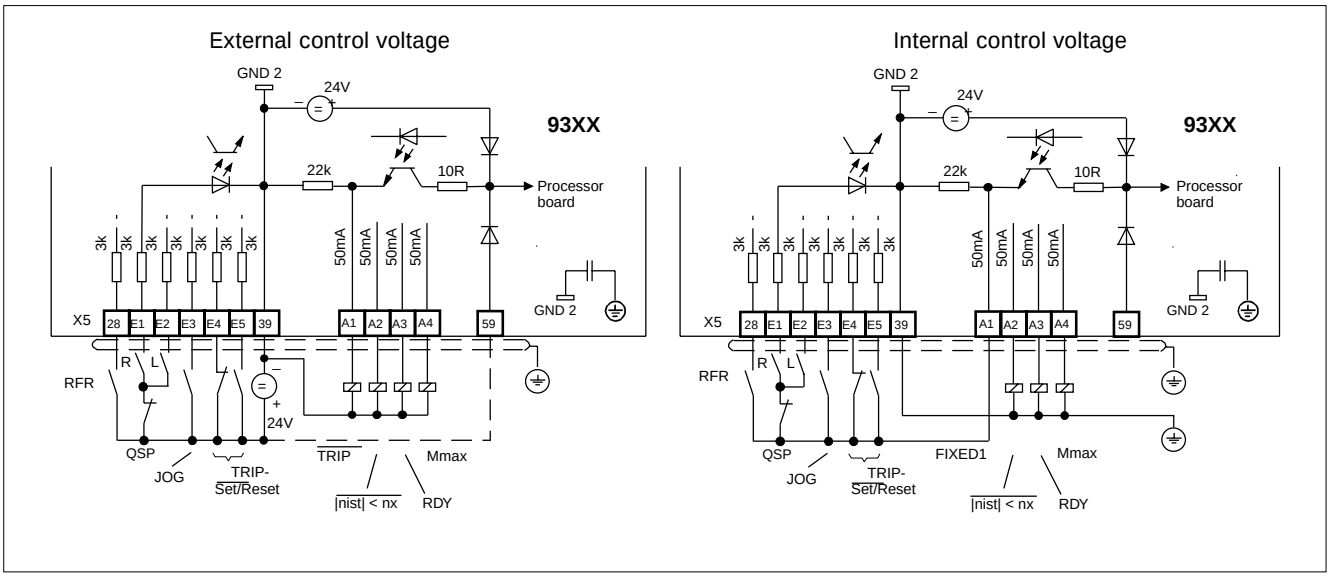

Example: Assignment of the input and output terminals

DC-bus connection with 9340 regenerative power supply modules

In multi-axis operation of the servo, the use of a regenerative power supply module offers advantages.

The following circuit diagram shows a wiring proposal of a DC-bus connection.

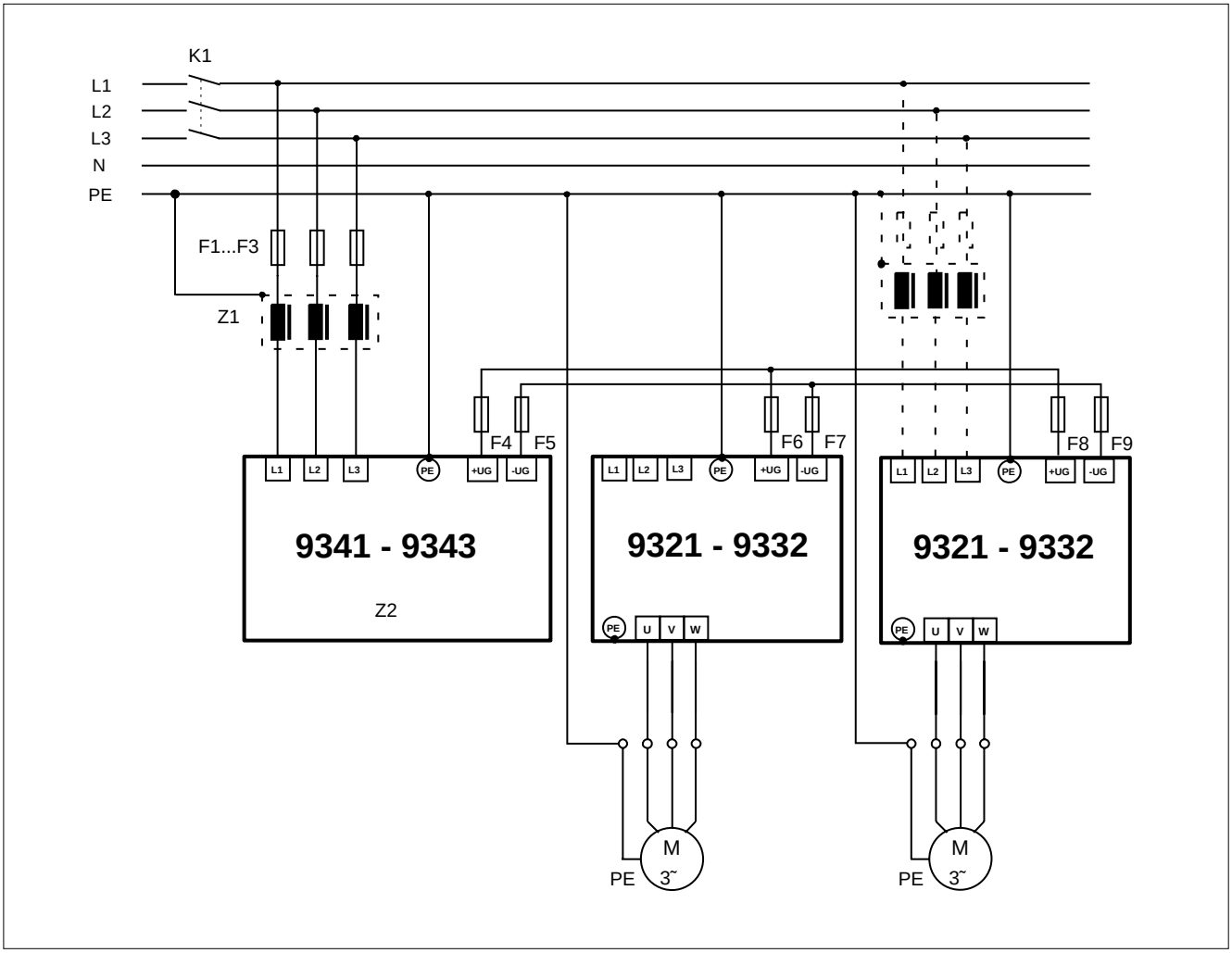

Order form

Recipient: **Lenze**
Branch office/ Representative

Postal code/city: _____

Fax number: _____

93XX servo with accessories

Sender

Company _____ Customer no. _____

Street / P.O. box _____ Order no. _____

Postal code / City _____ Issuer _____

Address for delivery* _____ Phone _____

_____ Fax _____

Invoice addressee* _____ Date of delivery _____

* Please fill out when not sender. Date _____ Signature _____

Name	Type	Pieces	Price	Type	Pieces	Price
Servo	EVS93__-E			EVS93__-E		
Automatic-circuit breaker						
Fuse						
Fuse holder						
Mains filter A						
Mains filter B						
Thermal separation						
DC fuses						
Fuse holder						
Brake chopper						
Brake resistor						

Name	Type	Pieces	Price
Setpoint potentiometer	ERPD0010k0001W		
Knob for potentiometer	ERZ0001		
Scale for potentiometer	ERZ0002		
Operation module 9371BB	EMZ9371BB		
Digital display	EPD203		
Brake module	EMB9351-E		
LECOM A/B module	EMF2102IB-V001		
LECOM B module	EMF2102IB-V002		
Level converter for LECOM B	EMF2101IB		
PC system cable LECOM A/B	EWL0001		
LECOM LI module	EMF2102IB-V003		
Fibre-optic adapter for PLC 0...40 m	EMF2125IB		
Power supply unit for 2125	EJ0013		
InterBus-S module	EMF2111IB		
PROFIBUS module	EMF2131IB		

Order form

Recipient: **Lenze**
Branch office/ Representative

Postal code/city: _____

Fax number.: _____

934XE regenerative power supply module

Sender

Company _____ Customer no. _____

Street / P.O. box _____ Order no. _____

Postal code / City _____ Issuer _____

Address for delivery* _____ Phone _____

_____ Fax _____

Invoice addressee* _____ Date of delivery _____

* Please fill out when not sender. Date _____ Signature _____

Name	Type	Pieces	Price	Type	Pieces	Price
Regenerative power supply module	EMB934__-E			EMB934__-E		
Fuse						
Fuse holder						
Mains filter A						
Thermal separation						

Lenze worldwide

Stammwerk
Head office

Lenze GmbH & Co KG
Postfach 10 13 52
D-31763 Hameln
Telefon ++49 (0)5154 / 82-0
Telefax ++49 (0)5154 / 82-28 00
E-Mail: Lenze@Lenze.de

Lenze GmbH & Co KG Anlagenbau
Buchenweg 1
D-31855 Aerzen
Telefon ++49 (0)5154 / 82-0
Telefax ++49 (0)5154 / 82-21 00

Lenze GmbH & Co KG Bremsen
Wülmser Weg 5
D-31855 Aerzen
Telefon ++49 (0)5154 / 82-14 53
Telefax ++49 (0)5154 / 82-11 04

Lenze GmbH & Co KG Kleinantriebe
Hans-Lenze-Straße 1
D-32699 Extertal
Telefon ++49 (0)5154 / 82-0
Telefax ++49 (0)5154 / 82-14 85

Lenze GmbH & Co KG Service
Breslauer Straße 3
D-32699 Extertal
Mechanical Drives
Telefon ++49 (0)5154 / 82-16 26
Telefax ++49 (0)5154 / 82-13 96
Electronic Drives
Telefon ++49 (0)5154 / 82-11 11
Telefax ++49 (0)5154 / 82-11 12
Service Helpline
++49 (0)180 5 20 24 26

Lenze Verbindungstechnik GmbH & Co KG (Repräsentanz)
Anton-Schmidt-Straße 5
D-71307 Waiblingen
Telefon ++49 (0)7151 / 95 21-0
Telefax ++49 (0)7151 / 1 85 86

LS Automation GmbH & Co KG
Robert-Bosch-Straße 11
D-78467 Konstanz
Telefon ++49 (0)7531 / 69 67 06
Telefax ++49 (0)7531 / 6 86 16

Deutschland
Germany

Werksniederlassung Nord
Lenze GmbH & Co KG Vertrieb
Dornenpark 1
31840 Hessisch Oldendorf
Telefon (0 51 52) 90 36-0
Telefax (0 51 52) 90 36-33/44/55

Vertriebsbüros:
Barsbüttel
Telefon (0 40) 67 56 11 00
Telefax (0 40) 67 56 11 01
Berlin
Telefon (0 33 04) 3 11 23
Telefax (0 33 04) 3 16 82
Berlin
Telefon (0 30) 56 40 03 91
Telefax (0 30) 56 40 03 92
Bielefeld
Telefon (05 21) 8 75 23 94
Telefax (05 21) 8 75 27 20
Bielefeld
Telefon (05 21) 98 68 54
Telefax (05 21) 98 68 55
Bremen
Telefon (04 21) 42 12 21
Telefax (04 21) 42 12 51
Hameln
Telefon (0 51 54) 9 61 32
Telefax (0 51 54) 9 65 40
Hannover
Telefon (0 51 02) 91 45 54
Telefax (0 51 02) 91 45 55
Magdeburg
Telefon (03 91) 6 31 33 73
Telefax (03 91) 6 31 63 61
Norderstedt
Telefon (0 40) 52 68 21 23
Telefax (0 40) 52 68 21 25
Osnabrück
Telefon (0 54 61) 9 11 00
Telefax (0 54 61) 9 11 01

Verbindungstechnik:
Telefon (0 51 52) 90 36-0
Telefax (0 51 52) 90 36-44

Werksniederlassung West
Lenze GmbH & Co KG Vertrieb
Postfach 10 12 20
47497 Neukirchen-Vluyn
Kelvinstraße 7
47506 Neukirchen-Vluyn
Telefon (0 28 45) 95 93-0
Telefax (0 28 45) 95 93 93

Vertriebsbüros:
Aachen / Düren / Erft-Kreis
Telefon (02 02) 2 70 12 50
Telefax (02 02) 2 70 12 51
Dortmund / Bochum / Märk. Kreis
Telefon (0 23 89) 60 46
Telefax (0 23 89) 60 47
Düsseldorf / Krefeld / Heinsberg
Telefon (0 28 45) 95 93-0
Telefax (0 28 45) 95 93 93
Essen / Mettmann
Telefon (0 28 45) 95 93-14
Telefax (0 28 45) 95 93 93
Kleve / Wesel / Viersen
Telefon (0 28 73) 91 90 44
Telefax (0 28 73) 91 90 45
Köln / Bonn / Rhein.-Berg.-Kreis
Telefon (0 22 43) 91 25 36
Telefax (0 22 43) 91 25 37
Recklinghausen / Borken / Coesfeld
Telefon (0 23 62) 9 80 11
Telefax (0 23 62) 9 80 12
Wuppertal / Ennepe-Ruhr-Kreis / Oberberg.-Kreis
Telefon (0 23 39) 91 29 40
Telefax (0 23 39) 91 29 41

Werksniederlassung Mitte
Lenze GmbH & Co KG Vertrieb
Postfach 14 63
35724 Herborn
Westerwaldstraße 36
35745 Herborn
Telefon (0 27 72) 95 94-0
Telefax (0 27 72) 5 30 79

Vertriebsbüros:
Braunfels
Telefon (0 64 42) 96 21 30
Telefax (0 64 42) 96 21 31
Frankfurt
Telefon (0 27 79) 9 10 20
Telefax (0 27 79) 9 10 22
Karlsruhe
Telefon (0 72 46) 94 20 30
Telefax (0 72 46) 94 20 31
Kassel
Telefon (0 56 65) 92 10 14
Telefax (0 56 65) 92 10 15
Koblenz
Telefon (0 27 79) 9 10 61
Telefax (0 27 79) 9 10 63
Landau
Telefon (0 63 45) 91 90 30
Telefax (0 63 45) 91 90 31

Verbindungstechnik:
Telefon (0 66 82) 1 00 43
Telefax (0 66 82) 14 08

Werksniederlassung Südwest
Lenze GmbH & Co KG Vertrieb
Postfach 14 33
71304 Waiblingen
Schänzle 8
71332 Waiblingen
Telefon (0 71 51) 9 59 81 - 0
Telefax (0 71 51) 9 59 81 50

Vertriebsbüros:
Backnang
Telefon (0 71 51) 30 25 59
Telefax (0 71 51) 30 25 60
Esslingen
Telefon (0 71 51) 9 59 81-17
Telefax (0 71 51) 9 59 81 50
Freiburg
Telefon (0 76 65) 91 20 44
Telefax (0 76 65) 91 20 45
Reutlingen
Telefon (07 41) 9 30 12
Telefax (07 41) 9 30 13
Rottweil
Telefon (0 74 28) 9 10 76
Telefax (0 74 28) 9 10 77
Singen
Telefon (0 77 31) 94 70 17
Telefax (0 77 31) 94 70 18
Südbaden
Telefon (07 41) 9 30 90
Telefax (07 41) 9 30 91

Werksniederlassung Süd
Lenze GmbH & Co KG Vertrieb
Fraunhoferstraße 16
82152 Martinsried
Postfach 11 26
82141 Planegg
Telefon (0 89) 89 56 14-0
Telefax (0 89) 89 56 14 14

Vertriebsbüros:
Allgäu
Telefon (0 83 64) 98 65 33
Telefax (0 83 64) 98 65 35
Ansbach
Telefon (0 98 03) 9 40 11
Telefax (0 98 03) 9 40 12
Augsburg / Key-Account-Vertrieb
Telefon (08 21) 2 62 00 21
Telefax (08 21) 2 62 00 22
München
Telefon (0 89) 32 14 98 40
Telefax (0 89) 32 14 98 41
Oberfranken
Telefon (0 91 26) 28 66 33
Telefax (0 91 26) 28 66 34
Rosenheim
Telefon (0 80 51) 30 94 80
Telefax (0 80 51) 30 94 81
Unterfranken
Telefon (0 93 67) 9 91 11
Telefax (0 93 67) 9 91 12

Verbindungstechnik:
Telefon (0 89) 98 10 53 18
Telefax (0 89) 98 10 53 20

Werksniederlassung Ost
Lenze GmbH & Co KG Vertrieb
Grimmaische Straße 78
04720 Döbeln
Telefon (0 34 31) 66 06-0
Telefax (0 34 31) 66 06 66

Vertriebsbüros:
Döbeln
Telefon (0 34 31) 66 06 13
Telefax (0 34 31) 66 06 66
Sömmerda
Telefon (0 36 34) 60 18 09
Telefax (0 36 34) 60 18 60

weltweit
worldwide

ARGENTINA
E.R.H.S.A.
Girardot 1368
1427 BUENOS AIRES
Phone ++54 (0)11 / 45 54 32 32
Telefax ++54 (0)11 / 45 52 36 11

AUSTRALIA
FCR Motion Technology Pty. Ltd.
Automation Place
23 McArthur's Road
P.O. Box 359
Altona North
3025 MELBOURNE
Phone ++61 (0)3 / 93 99 15 11
Telefax ++61 (0)3 / 93 99 14 31

AUSTRIA
Lenze Antriebstechnik Ges.m.b.H.
Postfach 21
Mühlenstraße 3
4470 ENNS
Phone ++43 (0)7223 / 88 6-0
Telefax ++43 (0)7223 / 88 66 6

Büro Vorarlberg:
Wiesenweg 1
6960 WOLFURT
Phone ++43 (0)5574 / 67 89-0
Telefax ++43 (0)5574 / 67 89 66

Büro Wien:
Triester Straße 14/109
2351 WR. NEUDORF
Phone ++43 (0)2236 / 2 53 33-0
Telefax ++43 (0)2236 / 2 53 33-66

Lenze Verbindungstechnik
GmbH & Co KG
Breitwiesenstraße 3
4481 ASTEN
Telefon ++43 (0)7224 / 6 57 00-0
Telefax ++43 (0)7224 / 6 57 00 66

BELGIUM
Lenze b.v.b.a
Noorderlaan 133
bus 15
2030 ANTWERPEN
Phone ++32 (0)3 / 54 26 20 0
Telefax ++32 (0)3 / 54 13 75 4

BOSNIA-HERZOGOVINA
see AUSTRIA

BRAZIL
IMETEX Comércio e Participações Ltda.
Rua Alexandre Dumas 001213
Chácara Santo Antonio
CEP 04717-902 SÃO PAULO
Phone ++55 (0)11 / 51 82-79 11
Telefax ++55 (0)11 / 51 81-17 77

BULGARIA
see MACEDONIA

CANADA
see USA

CHILE
Sargent S.A.
Tecnica Thomas C. Sargent
S.A.C.é.I.,
Casilla 166-D
SANTIAGO DE CHILE
Phone ++56 (0)2 / 69 91 52 5
Telefax ++56 (0)2 / 69 83 98 9

Aupi Ltda.
Automation y Proceso Industrial
Camino a Melipilla No. 262
SANTIAGO DE CHILE
Phone ++56 (0)2 / 81 11 80 4
Telefax ++56 (0)2 / 81 11 10 2

CHINA
Lenze GmbH & Co KG
Beijing Representative Office
Rm. 401, Huaxin Mansion
No. 33, An Ding Road
Chaoyang District
BEIJING 100029
Phone ++86-10-6441 1470/71/72/73
Telefax ++86-10-6441 1467

CROATIA
see AUSTRIA

CZECH REPUBLIC
Lenze Antriebstechnik GmbH
informační a poradenské středisko
17. listopadu 510
549 41 ČERVENÝ KOSTELEC
Phone ++420 (0)441 / 467-111
Telefax ++420 (0)441 / 467-166

DENMARK
Leomotor A/S
Ingenior- & Handelsfirma
Stubmøllevej 35-37
Postb. 438
2450 KØBENHAVN SV
Phone ++45 / 36 30 66 66
Telefax ++45 / 36 30 64 33

Büro Jylland:
Leomotor A/S
Enebærvej 11
8653 THEM
Phone ++45 / 86 84 75 33
Telefax ++45 / 86 84 83 53

EGYPT
AL-FARID
Mohamed Farid Hassanen & Co
1349 Kornish El Nile
CAIRO - EL SAHEL
Phone ++20 (0)2 / 20 56 26-7/8/9/0
Telefax ++20 (0)2 / 20 56 27 1

ESTLAND
see FINLAND

FINLAND
Refimex Drives Oy
P.O. Box 35
02271 ESPOO
Hannuksentie 1
02270 ESPOO
Phone ++358 (0)9 / 80 48 61
Telefax ++358 (0)9 / 88 40 94 1

FRANCE
Lenze S.A.
Z.A. de Chanteloup
Rue Albert Einstein
93603 AULNAY S/S BOIS CEDEX
Phone ++33 (0)1 / 48 79 62 00
Telefax ++33 (0)1 / 48 69 40 99

Succ. Rhône-Alpes:
42, Chemin des Pivolles
69150 DÉCINES-CHARPIEU
Phone ++33 (0)4 / 72 15 40 20
Telefax ++33 (0)4 / 78 26 88 36

Agence Sud-Ouest:
14, rue Capus
31400 TOULOUSE
Phone ++33 (0)5 / 61 14 85 37
Telefax ++33 (0)5 / 61 14 85 38

Agence Est:
2, rue des Tulipes
67870 GRIESHEIM-PRÈS-MOLSHEIM
Phone ++33 (0)3 / 88 38 09 20
Telefax ++33 (0)3 / 88 38 17 24

GREECE
Georg P. Alexandris AG
K. Mavromichali Str. 12
P.O. Box 86 009
185.03 PIRÄUS
Phone ++30 (0)1 / 41 11 84 1
Telefax ++30 (0)1 / 41 27 05 8

Georg P. Alexandris AG
Monastiriou Str. 153
546.27 THESSALONIKI
Phone ++30 (0)31 / 52 75 21 2
Telefax ++30 (0)31 / 51 18 15

HUNGARY
Lenze Antriebstechnik GmbH.
Szerviz és Informácios Iroda
2040, BUDAÖRS, GYÁR UTCA 2.
Phone ++36 (0)23 / 501-320
Telefax ++36 (0)23 / 501-339

ICELAND
see DENMARK

INDIA
Emco Lenze Pvt. Ltd.
106 Sion Koliwada Road
Sion (East)
MUMBAI 400 022
Phone ++91 (0)22 / 40 71 81 6
40 76 37 1
40 76 43 2
40 77 45 3
Telefax ++91 (0)22 / 40 90 42 3

INDONESIA
P.T. Futurindo Globalsatya
Jl.: Prof. Dr. Latumenten No. 18
Kompleks Perkantoran
Kota Grogol Permai Blok A 35
JAKARTA 11460
Buero 1:
Phone ++62 (0)21 / 766 42 34
765 86 23
Telefax ++62 (0)21 / 766 44 20
Buero 2:
Phone ++62 (0)21 / 567 96 31
567 96 32
Telefax ++62 (0)21 / 566 87 50

IRAN
Tavan Ressan Co.,
P.O. Box 19395-5177
Ayatollah-Sadr Exp.Way,
South Dastour Ave., Habibi Str. No. 44
TEHRAN 19396
Phone ++98 (0)21 / 26 67 66
26 26 55
26 92 99
Telefax ++98 (0)21 / 20 02 88 3

ISRAEL
Greenshpon Eng., Works Ltd.
20 Haamelim St', P.O. Box 10 108
HAIFA-BAY 26110
Phone ++972 (0)4 / 87 21 18 7
Telefax ++972 (0)4 / 87 26 23 1

ITALY
Gerit Trasmissioni S.p.A.
Viale Monza 338
20128 MILANO
Phone ++39 (0)02 / 27 09 81
Telefax ++39 (0)02 / 27 09 82 92

JAPAN
Miki Pulley Co., Ltd.
1-39-7 Komatsubara, Zama-city
KANAGAWA 228-8577
Phone ++81 (0)462 / 58 16 61
Telefax ++81 (0)462 / 58 17 04

LUXEMBOURG
see BELGIUM

MACEDONIA
Lenze Antriebstechnik GmbH
Pretstavnistov Skopje
Nikola Rusinski str. III/A/2
91000 SKOPJE
Phone ++389 (0)91 / 39 00 90
Telefax ++389 (0)91 / 39 00 91

MALAYSIA
D.S.C. Engineering SDN. BHD.
40B, Jalan SS 21/58
Damansara Utama
47400 Petaling Jaya
SELANGOR
Phone ++60 (0)3 / 718 6530
Telefax ++60 (0)3 / 719 5031

MEXICO
see USA

NETHERLANDS
Lenze B.V., Postbus 31 01
5203 DC`S-HERTOGENBOSCH
Ploegweg 15
5232 BR`S-HERTOGENBOSCH
Phone ++31 (0)73 / 64 56 50 0
Telefax ++31 (0)73 / 64 56 51 0

NEW ZEALAND
Tranz Corporation
112 Mays Road, Onehunga
P.O. Box 12-320, Penrose
AUCKLAND
Phone ++64 (0)9 / 63 45 51 1
Telefax ++64 (0)9 / 63 45 51 8

NORWAY
DtC-Lenze A/S
Elveveien 26-28
1472 FJELLHAMAR
Phone ++47 / 67 91 24 50
Telefax ++47 / 67 97 20 25

PHILIPPINES
Jupp & Company Inc.
Unit 2111, Cityland 10, Tower II
6817 Ayala Ave. Cor. H. V.
De La Costa St.
MAKATI, METRO MANILA
Phone ++63 (0)2 / 89 43 89 8
89 21 50 6
Telefax ++63 (0)2 / 89 32 07 4

POLAND
Lenze-Rotiw Sp. z o.o.
ul. Roździeńskiego 188b
40-203 KATOWICE
Phone ++48 (0)32 / 2 03 03 15
Telefax ++48 (0)32 / 75 72 73 4

PORTUGAL
COSTA, LEAL E VICTOR, LDA
R. Augusto Lessa 269 - Apart. 2060
4201 PORTO CODEX
Phone ++351 (0)2 / 5 50 85 20
Telefax ++351 (0)2 / 5 02 40 05

ROMANIA
see AUSTRIA

RUSSIA
Inteldrive, Leningradskoye Shosse 58
Building 21, Floor 3, # 3
MOSCOW 125212
Phone ++7 095 / 459 97 65
Telefax ++7 095 / 452 15 12

SINGAPORE
see MALAYSIA

SLOVAC REPUBLIC
see CZECH REPUBLIC

SLOVENIA
Lenze pogonska tehnika GmbH
Podruznica Ljubljana
C.A. Bitenca 68
1000 LJUBLJANA
Phone ++386 61 / 15 026 15
Telefax ++386 61 / 15 026 10

SOUTH AFRICA
S.A. Power Services (Pty.) Ltd.
P.O. Box 11 37
RANDBURG 2125
Phone ++27 (0)11 / 78 71 80 1
Telefax ++27 (0)11 / 78 75 04 0

SOUTH KOREA
see CHINA

SPAIN
Lenze Transmisiones, S.A.
Mila i Fontanals, 135-139
08205 SABADELL (Barcelona)
Phone ++34 93 / 72 07 68 0
Telefax ++34 93 / 71 22 54 1

SWEDEN
Lenze Transmissioner AB
Box 10 74
58110 LINKÖPING
Phone ++46 (0)13 / 35 58 00
Telefax ++46 (0)13 / 10 36 23

SWITZERLAND
Lenze Bachofen AG
Ackerstraße 42, Postfach
8610 USTER-ZÜRICH
Phone ++41 (0)1 / 94 41 21 2
Telefax ++41 (0)1 / 94 41 23 3

Vente Suisse Romande:
Route de Prilly 25
1023 CRISSIER
Phone ++41 (0)21 / 63 72 19 0
Telefax ++41 (0)21 / 63 72 19 9

TAIWAN
ACE Pillar Trading Co. Ltd.
No.12, Lane 61, Sec. 1,
Kuanfu Road
San-Chung City
TAIPEI HSIEN
Phone ++886 (0)2 / 299 58 40 0
Telefax ++886 (0)2 / 299 53 46 6

THAILAND
Weinmann & Schneider Co., Ltd.
429 Moo 7, Theparak Road
Tambol Theparak
Amphur Muang
SAMUTPRAKARN 10270
Phone ++66 (0)2 / 38 35 13 4
38 35 63 36
38 36 60 68
38 36 57 6
Telefax ++66 (0)2 / 38 35 63 7

TURKEY
ELINTAŞ
Elk.Yat.Mak.San. ve Tic.A.Ş.
Mumhane Cad, Eltem Han. No:62
80030 KARAKÖY/ISTANBUL
Phone ++90 (0)216 / 429 59 69
429 59 70
Telefax ++90 (0)216 / 429 59 71

UNITED KINGDOM/EIRE
Simplatroll Ltd.
Caxton Road
BEDFORD MK 41 OHT
Phone ++44 (0)1234 / 35 00 44
Telefax ++44 (0)1234 / 26 18 15

USA
Lenze Corp.
175 Route 46 West
FAIRFIELD NJ 07004
Phone ++1 973 / 227-5311
Telefax ++1 973 / 227-7423

Lenze Corp.
1730 East Logan Avenue
EMPORIA KS 66 801
Phone ++1 316 / 34 38 40 1
Telefax ++1 316 / 34 22 59 5

Lenze Corp.
300 Petty Road
Suite E
LAWRENCEVILLE, GA 30043
Phone ++1 770 / 962-3696
Telefax ++1 770 / 962-2983

YUGOSLAVIA
see MACEDONIA