Operating Instructions 12/2006 Edition

SIMATIC MV220

Image Processing Systems

simatic sensors

SIEMENS

SIEMENS

English

SIMATIC

Image Processing Systems
SIMATIC MV220

Operating Instructions

12/2006 Edition
A5E00751678-02

Siemens AG
Automation and Drives
Postfach 48 48
90437 Nürnberg
GERMANY

A5E00751678-02
12/2006 Edition

Safety Guidelines

Warning
Laser in the alignment tool:
LASER RADIATION – DO NOT LOOK AT THE BEAM – LASER CLASS 2
Wavelength: 655 nm – Maximum radiant power: < 1 mW -
DIN EN 60825-1:2003.

Notice
LED lighting
Light emitting diode Class 1 according to DIN EN 60825-1:2003.

Safety note for class 2 laser product:

LASER RADIATION

DO NOT STARE INTO BEAM
CLASS 2 LASER PRODUCT

MAX. OUTPUT < 1 mW
WAVELENGTH = 655nm

EN 60825-1: !994+A1+A2
IEC 60825-1: 2001

Complies with FDA performance standards for laser products expect for deviation pursuant to Laser Notice No. 50, dated July 26, 2001

Qualified personnel

Start-up and operation of the device/equipment/system in question must only be performed using this documentation. Commissioning and operation of a device/system may only be performed by qualified personnel. Qualified personnel as referred to in the safety guidelines in this documentation are those who are authorized to start up, earth and label units, systems and circuits in accordance with the relevant safety standards.

Proper use

Note the following:

Warning

The unit may be used only for the applications described in the catalog or the technical description, and only in combination with the equipment, components and devices of other manufacturers where recommended or permitted by
Siemens. This product can only function correctly and safely if it is transported, stored, set up, and installed correctly, and operated and maintained as recommended.

Trademarks

All designations with the trademark symbol ® are registered trademarks of Siemens AG. Other designations in this documentation may be trademarks whose use by third parties for their own purposes may infringe the rights of the owner.

Liability disclaimer

We have conscientiously checked the contents of this manual to ensure that they coincide with the hardware and software described. Since deviations cannot be precluded entirely, we cannot guarantee full agreement. The information given in this publication is reviewed at regular intervals and any corrections that might be necessary are made in the subsequent editions.

Table of Contents

Scope of supply

Number	Product designation	Machine-Readable Product Code
1	SIMATIC MV220	6GF5110-0AA00-0AA0
1	Template for frame alignment and compensation for ambient conditions	
	Template 1 (black/white) 	
	Template 2 (white) 	
1	Operating instructions	

Optional

Product designation	Machine-Readable Product Code
Fixing system for industrial sensors	
Rod	3RX7316
Device holder	3RX7326
Screw base	3RX7322
Pre-configured terminal connecting lines	
Connection to interface X1: Cable socket M12, 8-pin, with 5 m PUR line	3RX8000-0CB81-1GF0
Connection to interface X2: Cable plug M12, 8-pin, with 5 m PUR line	3RX8000-0CD81-1GF0

Introduction

Contents of the operating instructions

This manual contains all the information you need for start-up and for operating and maintaining the sensor.

Description

The sensor is a two-dimensional color sensor, suitable for detection and inspection tasks based on colors.

It can be used in two operating modes:

- Color mark analysis (matching) inspects multicolor surfaces for color components and their distribution. The sampling window is determined and evaluated in accordance with its overall color properties. The color composition of the current image is compared here with the previously taught samples. The background must not change between inspection runs.
- For color characteristic recognition, the sensor searches for a specific color and its frequency of occurrence throughout the complete image window. The frequency of occurrence in the current image is compared here with the frequency of the color in the previously taught sample. Only the changes in this specific color are recognized and evaluated. This means that the background or other color characteristics of the test object can differ between inspection runs because they are not taken into account during the inspection.

The SIMATIC MV220 compares the results with the taught "Model" and provides the information as to whether the inspection run was successful or not.

Due to the variable image window, the SIMATIC MV220 can be adapted to the application and object with regard to resolution and object size.

It is possible to save color samples for up to 16 different objects as models in the sensor.

Interfacing to a higher-level (automation) system is possible through standardized digital inputs and outputs (X1 plug/X2 socket).

Product Description

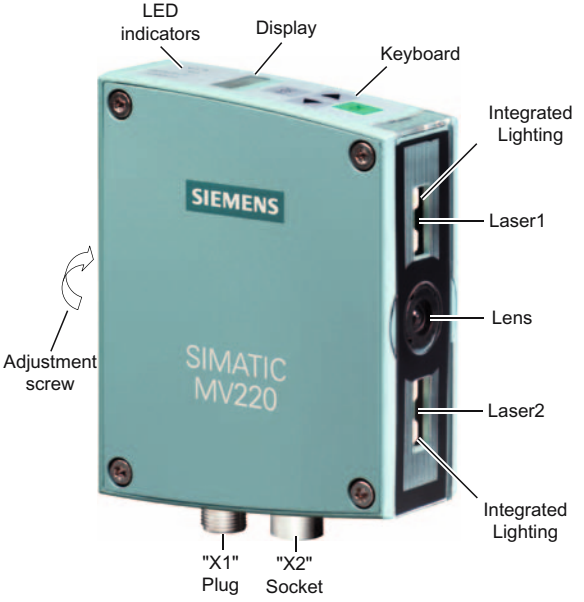

The SIMATIC MV220 is a stand-alone product in the cuboid form typical for sensors. All the elements required for the inspection are integrated into a single housing:

- Integrated lighting
- Optical alignment tool (Laser1/Laser2)
- Operating unit (LED indicators, display, keyboard)
- Image analysis
- Optical system for image capture
- Interfaces X1, X2: Digital inputs/outputs

Application Planning

Recommendations for application planning

- Observe the climatic and mechanical requirements in the technical data.
- To ensure optimum test results, avoid changing the ambient temperature.
- The device is suitable for use in industrial environments (IP65)
- When selecting the installation site, avoid daylight and widely varying lighting effects on the object. Shading should be provided to block undesirable incident light.

> **Note**
> The SIMATIC MV220 cannot be used for safety-related applications (e.g. protection of persons) due to its physical characteristics.

Installation/Mounting

- **Mounting the SIMATIC MV220**
  Seven M4 fixing holes (see dimension drawing) are used to mount the SIMATIC MV220 (e.g. on the device holder of the fixing system). The fixing system for industrial sensors is optionally available as an accessory.

- **Grounding of the SIMATIC MV220**
  To prevent EMC interference, the sensor must be mounted on a grounded metal plate with the four exterior mounting bores M4 (see dimensional drawing).

Connecting

The sensor is connected to a 24 V DC power supply.

- **Technical safety measures**
  The SIMATIC MV220 must be provided with an NEC class2 power pack. Also possible is the provision of a voltage (20.4 V DC to 28.8 V DC) generated with secure isolation and a fuse installed on the installation side in accordance with UL 248-14, ≤ 4 A.

Power supply and digital inputs and outputs

M12 plug, X1	Pin.No. / Conductor coloring *	Short designation	Function	Input/ Output
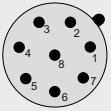	1 white	L+	Load voltage L+, 24 V DC	Input
	2 brown	N_OK	Status: Model N_OK 0 = Model recognized 1 = Model not recognized	Output
	3 green	M	Load voltage M	Input
	4 yellow	OK	Status: Model OK 0 = Model not recognized 1 = Model recognized	Output
	5 gray	TRG OUT	Trigger output for external lighting	Output
	6 pink	DIAG	Diagnostics display 0 = No diagnostics alarm available 1 = A diagnostics alarm is present	Output
	7 blue	TRG	Trigger input	Input
	8 red	RDY	Ready: Operating mode of the sensor 1 = Sensor is ready to operate 0 = Sensor is not ready to operate	Output

* applicable for the cable 3RX8000-0CB81-1GF0

Inputs for model selection and key disabling

M12 socket, X2	Pin.No. / Conductor coloring *	Short designation	Function	Input/ Output
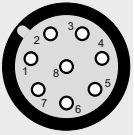	1 white	Not assigned		
	2 brown	SEL0	Select 0: "Model" selection Bit 0	Input
	3 green	SEL1	Select 1: "Model" selection Bit 1	Input
	4 yellow	SEL2	Select 2: "Model" selection Bit 2	Input
	5 gray	SEL3	Select 3: "Model" selection Bit 3	Input
	6 pink	DISA	Disable: Disabling manual key operation 0 = Operation enabled 1 = Operation disabled	Input
	7 blue	Not assigned		
	8 red	Not assigned		

* applicable for the cable 3RX8000-0CD81-1GF0

Alignment

Requirements for rugged inspection of objects

- The object to be inspected must fill the image window to the greatest possible extent.
- The distance from the object should be as short as possible. The shorter the distance to the object:
  - The less influence ambient light has on the sensor.
  - The higher the resolution (pixels per millimeter).
- Suggested remedies for disturbing influences:
  - Shadowing against daylight, neon light or strongly varying light influences
  - Large differences in operating temperature can result in variations (reduction) in the test results. An improvement can be achieved by training the models to be tested under the temperature conditions of RUN mode.
  - Strongly reflective backgrounds/objects can lead to variations in the test results. An improvement can be achieved by mounting the SIMATIC MV220 at an angle of 5° to 45° to the surface of the test object.

Determining the image window

The SIMATIC MV220 has an adjustable image window (40 x 30 mm to 200 x 150 mm). The distance to the sensor determines the size of the image window and can be determined as follows:

1. Measure the object to be inspected.
2. Calculate the distance:
   Distance = 5/4 · *Width* of the object
   Distance = 5/3 · *Height* of the object

Image window (width x height in mm)	Distance to sensor (mm)
40 x 30	50
56 x 42	70
80 x 60	100
120 x 90	150
160 x 120	200
200 x 150	250

Note
In color recognition mode, the minimum distance from the object to be inspected to the sensor is 70 mm.

Using the alignment tool

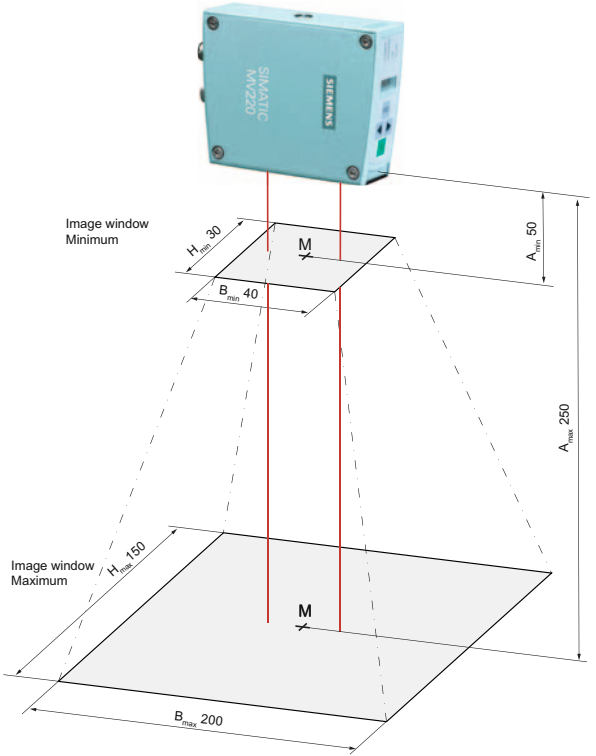

For easy alignment, the SIMATIC MV220 is equipped with an optical alignment tool:
Two laser beams project two light points into the image window of the sensor. The mid-point (M) of the image window always lies in the center of the path between the two light points. The alignment tool automatically switches itself on when required.

Operation

Key functions

Key	Function in a menu	Function when entering a value
ESC	Jumps to menu level above	Action is interrupted Value is not transferred
◀ ▶	Jumps to previous/next menu item in the same menu level	Decrements/increments actual value
OK	Activates selected menu item or jumps to next menu level	Loads actual value

LED displays

Graphic LED display	LED status	Meaning
POWER	green	Voltage is applied to sensor
STATE/SF	green	The sensor is in RUN mode
	Flashing green	Sensor is waiting for adjustment
		The sensor signals an error:
	red	in RUN
	Flashing red	in STOP
OK	yellow	Object was recognized as a taught model
N_OK	yellow	Object does not match the taught model

Start-up

The four steps for (initial) start-up	
1. Initial start-up	(Only for initial operation and after Reset All)
2. Teach model(s)	
3. Test adjustments	
4. Activate run mode	

Initial start-up

This step automatically activates Welcome mode when you start up the SIMATIC MV220 for the first time and after Reset All.

Requirements:

- Color-mark sensor is connected (24 V DC)
- You need the following tools:
  - A slot screw-driver Size 6 to 8 for adjusting the image at the adjustment screw
  - Template 1 (black/white) and Template 2 (white) for image alignment and ambient light compensation

Note before initial start up:

> **Note**
> The adjustment screw is designed to be difficult to move to prevent misalignment as a result of vibration and shaking. Please do not over-tighten the adjustment screw.

> **Note**
> Ensure that the templates completely fill the screen window and that they lie as flat as possible and horizontally underneath the sensor.

Display	Action/sequence
Welcome <OK>	Confirm with "OK"
Lighting ON/OFF	Integrated lighting ON: Lighting on OFF: Lighting off Switching the lighting on and off Confirm with "OK"
Adjust	Adjust image
Scr - to End <OK>	Rotate adjustment screw with screwdriver clockwise to the end stop Confirm with "OK"
Template1 <OK>	Place Template 1 (b/w) underneath Confirm with "OK"
Scr+	Rotate adjustment screw anticlockwise
Scr - STOP	Rotate adjustment screw clockwise until Stop appears in the display
Complete	Image adjustment is implemented
Calibration	Calibration
Template2 <OK>	Place Template 2 (w) underneath Confirm with "OK"
Exposure Time <XX>	Set exposure time Change exposure time Confirm with "OK"
Complete	Calibration completed
Sensor Ready	Sensor is ready for Step 2 Teach model(s)

Teach model(s)

To teach a model, select the "Train" menu.

Display		Action/sequence
Mode	OK	Confirm with "OK"
	◀ ▶	Select mode of the sensor
Matching	OK	Confirm with "OK"
	ESC	Go to main menu with <ESC> key
Mode	◀ ▶	Go to Train menu
Train	OK	Confirm with "OK"
Model No XX_ _	◀ ▶	Select the model number
	OK	Confirm with "OK"
Begin Teach-in		Teaching a model
Teach		
<OK> Trigger <ESC> End		Position model object
	OK	Capture image with <OK> key (also possible via trigger input Pin 7 of M12 socket X1)
O: 1		Object taught once
<OK> Trigger <ESC> End		Position model object
	OK	Capture image with <OK> key (also possible via trigger input Pin 7 of M12 socket X1)

O: 2		Object taught twice
<Esc>End	ESC	Tip: For optimal results, repeat Teach-in 5 times Go to saving with <ESC> key
Save?<OK><ESC>	OK	Confirm with "OK"
	ESC	<ESC> key to return without saving to display for Model NoXX_ _ (default setting: current model No.)
Precision Low		Set inspection precision
	OK	Confirm with "OK"
	◀ ▶	Change inspection precision
QLimit		Set quality limit
<XX%>	OK	Confirm with "OK"
	◀ ▶	Change recognition value
Complete		Model was taught successfully. The sensor is ready for Step 3: Test adjustments
Test?<OK><ESC>		
	OK	Activate test
	ESC	Go to Train menu

The procedure in matching mode is shown in the figure above. In recognition mode, however, the training procedure also comprises the submenus "Teach Color" and "Teach Area". These submenus are processed in sequence and cannot be individually selected.

The operator inputs are identical for both operating modes: Use the <OK> button to record model or color and range; use the <ESC> button to save it.

Notes regarding operating mode Recognition

For training the color in recognition mode (Teach Color), place the required color under Laser 1 of the optical alignment tool (see the figure "Design of the sensor").

For teaching of the area (Teach Area), place the test object in the final position, i.e. the desired test area of the test object is completely in the sensor image window.

In recognition mode, the color to be taught should cover an area 10% of the frame size (frame width). Examples:

- Distance 100 mm, frame width 80 mm;
  color area to be taught 8 mm x 8 mm.
- Distance 250 mm, frame width 200 mm;
  color area to be taught 20 mm x 20 mm.

In teach mode, after setting of the test sharpness (precision), the number of pixels of the test object is learned and shown in the display.

Note

When a model is trained again, the original data of the model are totally deleted.

Model No XX_

The sensor can store 16 different models (color samples of the objects). This is where you activate the number of the model to be taught. The next free model number is automatically suggested.

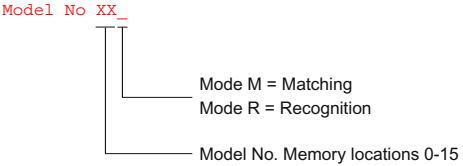

Teach: Teach model(s)

Recommended teaching procedures: 5 (max. 10)

Precision: Adjusting the inspection precision of the sensor

In the matching operating mode, the sensor can distinguish the following number of colors:

`Low =`	12 colors
`Medium =`	64 colors
`High =`	2048 colors

In recognition mode, the sensor defines the limits of the different color values differently:

`Low =`	wide color limits, e.g. light yellow, dark yellow, light orange are combined.
`Medium =`	medium color value limits, e.g. light yellow, dark yellow are combined.
`High =`	narrow color value limits, e.g. only light yellow.

Note

The lower the inspection precision, the more stable the sensor is against varying ambient conditions but the inspections are less accurate.

QLimit: Quality limit for recognition of objects

Value range for QLimit: 0% to 99%, default setting 80%

The sensor compares the color sample (matching) or color characteristic (recognition) of the taught object with that of the test object and determines the percentage value of correlation:

Calculated value ≥ QLimit:
Object has been recognized, switching output OK is set, OK LED is lit.

Calculated value < QLimit:
Object has not been recognized, switching output N_OK is set, N_OK LED is lit.

During evaluation, both switching outputs are set to 0.

Note
Changes to the ambient conditions

When the ambient conditions (e.g. lighting conditions) change or you switch off the integrated lighting of the SIMATIC MV220, you must calibrate the sensor to the altered ambient conditions and teach the trained object again under the new conditions.

Test adjustments

To test the adjustments, select the "Test" menu.

Display		Action/sequence
Begin Test		Start test
<OK> Trigger <ESC> End	 OK	Position model object Capture image with <OK> key (also possible via trigger input Pin 7 of M12 socket X1)
XX%		Conformity (QLimit) Signaling on LEDs ≥ Q limit OK LED lit < Q limit N_OK LED lit
<OK> Trigger <ESC> End	OK ESC	Repeat until the required objects have been tested End test with <ESC> key
Change Parameters? <OK><ESC>	OK ESC	Change parameters with <OK> key End test with <ESC> key
Teach-in Ready		Teach-in completed
Train	◀ ▶	Jump to Run mode

Note
If the model was taught in recognition mode, the actual number of pixels is displayed along with the percent of match in the display.

Activate run mode

Display		Action/sequence
Run	OK	Confirm with "OK"
XX_ _		Display of model number selected using the SEL inputs; sensor is ready for inspection (triggering via TRG)
XX%	ESC	Correlation is displayed Signaling on LEDs ≥ Q limit OK LED lit < Q limit N_OK LED lit Exit Run mode with <ESC> key
Stop?<OK><ESC>	OK ESC	<OK> key: Interrupt Run mode Return to main menu Back to Run mode with <ESC> key

Triggering in RUN mode

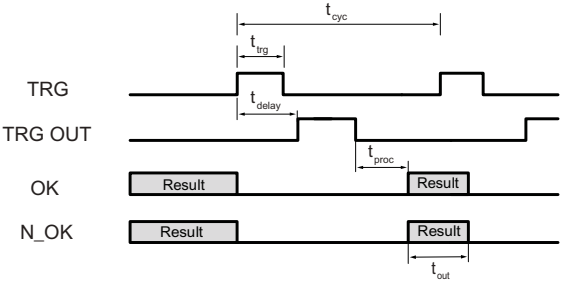

t_{cyc}	Cycle time	Min. 33 ms Min. 200 ms	For external lighting For internal lighting
t_{trg}	Trigger pulse width	Min. 1 ms	Smaller pulse widths are not detected by the sensor as a trigger.
t_{delay}	Response time	Max. 9 ms Max. 27 ms	For external lighting For internal lighting
t_{proc}	Processing time	Max. 8 ms	Image analysis
t_{out}	Output signal	Min. 15 ms	The output signal is reset with a new trigger pulse. The signal remains on for at least 15 ms.

Model selection using the SEL inputs

The model is selected using the SEL inputs. Only models of the appropriate operating mode are permissible.

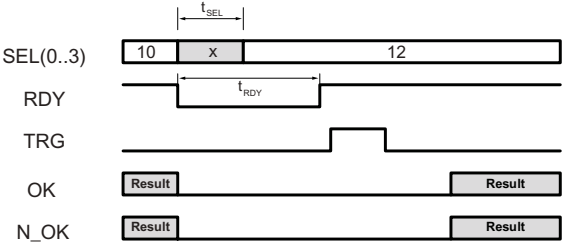

The diagram shows changeover from model No. 10 to No. 12.

t_{SEL}	Changeover time	Max. 30 ms	Within 30 ms, a stable input signal status must be applied to the SEL bits to ensure that model changeover can be performed successfully.
t_{RDY}	Changeover time	Max. 200 ms	After 200 ms, the sensor is ready for inspection

Menu structure

After you have performed the four steps in the start-up procedure, you can navigate freely around the menu structure.

Main menu	Submenu	Description
Mode		Operating mode of the sensor
	Matching	Matching mode
	Recognition	Recognition mode
Train Model_no		Menu for training the objects
	Teach	Teach model(s)
	Precision	Inspection precision (depth of color)
	QLimit	Quality limit for recognition
	Test	Test adjustments
	Delete	Deletion of the model
Run	-	Activate run mode
Setting		Menu for changing the settings
	Lighting	Integrated lighting on/off
	Adjust	Set picture sharpness
	Calibration	Calibrate sensor to the ambient conditions
	Reset All	Delete all settings, restart with initial start-up
Diagnosis	-	Display of acknowledged diagnostic alarms that remain active

Diagnostic messages

If an error occurs, the DIAG output is set to "1". The DIAG bit is automatically reset after 20 ms.

The sensor indicates on its display the currently active and unacknowledged errors with their error codes. The display starts with the most recent error. Indicated error messages are deleted when the error has been rectified and are acknowledged with the <OK> button. The following table lists the error codes, explains their meaning and provides suggestions for rectifying the error.

Error code	Meaning	Possible causes	Corrective actions
E01	Calibration unsuccessful, the sensor could not calculate any calibration data	Wrong template or no template; wrong lighting (e.g. red light)	Use the right template; protect against ambient light; use constant external lighting
E02	Image overexposed	Exposure time too long	Shorten the exposure time (parameter: Exposure Time)
E03	Image underexposed	Exposure time too short	Lengthen the exposure time (parameter: Exposure Time)
E04	Lighting is inadequate	Lighting too strong, too weak, not switched on or defective; wrong template or no template	Use internal lighting; use adequate external lighting; use the right template
E05	Training (teach-in) not successful	Object distance too small or laser point not found (absorption, laser fault)	Check mounting and calibration; increase distance to object; repeat calibration; repeat teach-in

Error code	Meaning	Possible causes	Corrective actions
E06	Saving the sensor settings has failed	Fault on saving	Repeat calibration; repeat teach-in
E07	Invalid model	A taught-in model was not found for the selected model number with the operating mode set.	Use the correct module number; change the operating mode
E08	Short-circuit on digital outputs, no output of test results	Short-circuit on digital outputs	Eliminate short circuit
E09	Load voltage too low	Overload on digital outputs, supply voltage too low	Check supply voltage; rectify undervoltage
E10	Invalid trigger	Triggering when sensor is not ready	Note cycle times; ensure triggering is correct (max. every 33 ms in 200 ms)
E11	Internal error	Temporary failure/fault; EMC; heat generation, overheating	Check the ambient conditions, switch off the internal lighting

Error code	Meaning	Possible causes	Corrective actions
FaEr	HW defect in individual components; sequential program cannot be executed	Sensor specific	Switch power off and on again; if error is still indicated, return sensor for repair. Do not try to repair the sensor.

Technical specifications

Criterion	Values
General technical specifications	
Dimensions (H x W x D) in mm	113 x 35 x 90
Weight in g	430
Degree of protection	IP65
Temperature range	0°C to 45°C
Voltages, currents, potentials	
Load voltage L+	20.4 V to 28.8 V DC (including ripple), with reverse polarity protection
Electrical isolation	none
U_{rated} (rated voltage)	24 V
I_{rated} (rated current)	0.8 A
Data for inputs	
Rated voltage	24 V
Input current	7 mA typical
Voltage range	Signal 1 15 to 30 V Signal 0 -3 to 5 V
Input delay	3 ms typical (input TRG 0.1 ms)
Input characteristics	IEC1131 Type 1
Data for the outputs	
Output voltage for "1" signal	L+ (–0.8 V)
Output current for "1" signal • Rated value	500 mA (outputs OK, N_OK) 100 mA (outputs TRG OUT, DIAG) 20 mA (RDY)
Short-circuit at the outputs	Yes, electronic

Criterion	Values
Lighting	
Light source	White light LED
Light intensity	800 LUX at 15 cm object distance
Image capture and evaluation	
Image sensor	CMOS sensor, 640 x 480 pixels
Size of the image window	is dependent on the object distance
• At 5 cm object distance	• Image window, approx. 40 mm x 30 mm
• At 25 cm object distance	• Image window, approx. 200 mm x 150 mm
Response time	< 9 ms
Evaluation time	33 ms
Using the internal lighting	Cycle times ≥ 200 ms
Functions	
Modes that can be set	Matching, Recognition
Triggering for image capture	Via digital input TRG; for "teach-in" also possible via operating unit
Number of models that can be taught	16
Teaching the models	"Teach-in" on the sensor
Diagnostic functions	Yes, output via DIAG, Group error LED and error code on display

Standards and certifications

IEC 61131-2

SIMATIC MV220 meets the requirements and criteria of the IEC 61131-2 Standard.

CE marking

SIMATIC MV220 satisfies the requirements and safety objectives of the EU directive specified below.

89/336/EEC "Electromagnetic Compatibility" (EMC guideline)

The EU conformity certificates are available for the relevant authorities and are kept at the following address:

Siemens AG
Automation and Drives
Factory Automation Sensors
P.O. Box 4848
90437 NUREMBERG
GERMANY

EMC Directive

SIMATIC MV220 is designed for industrial use.

Area of application	Requirement for	
	Emitted interference	Noise Immunity
Industry	EN 61000-6-4:2001	EN 61000-6-2:2001

Marks for Australia and New Zealand

SIMATIC MV220 fulfills the requirements of standard AS/NZS 2064 (Class A).

UL/CSA

Underwriters Laboratories (UL) according to Standard UL 508 and C22.2 No. 142 (IND.CONT.EQ)

C US

Maintenance

If repair is necessary, the affected module must be sent to the production location. Repairs can only be carried out there.

Service and support

Technical support

You can reach the technical support team for all A&D projects at:

Telephone: ++49 (0) 180 5050 222
Fax: ++49 (0) 180 5050 223

Internet

- Visit our site on the Internet at:
  http://www.siemens.com/automation/service&support

- You can send a support query to:
  http://www.siemens.com/automation/support-request

- The online catalog and the online ordering system is available at:
  www.siemens.com/automation/mall

- For further information on factory automation sensors, visit
  http://www.siemens.com/simatic-sensors

Dimension drawing

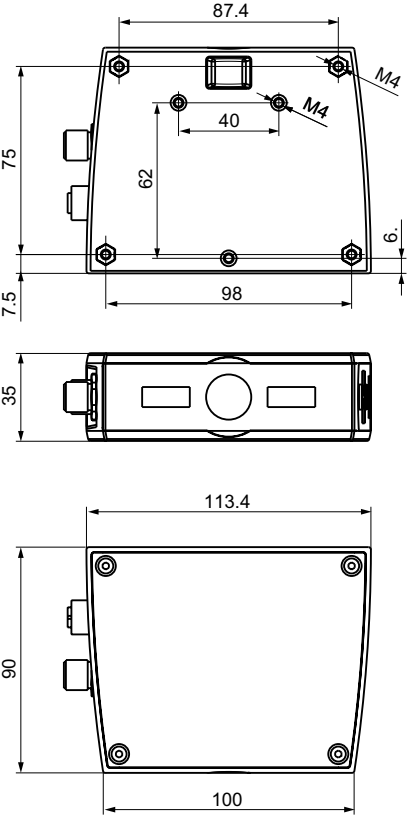

Dimensions in mm

Siemens AG

Automation and Drives
Factory Automation Sensors
P.O. Box 4848
90437 NUREMBERG
GERMANY

www.siemens.com/simatic-sensors